215664
SBT-F-R-R50-1S-B5
Signal column

- Status display 360°
- Good signal effect thanks to state-of-the art, efficient LEDs
- Low energy consumption
- Immediately usable, direct predefined segment activation
- Simple installation (M30 threading)
- Assembly accessories optionally available

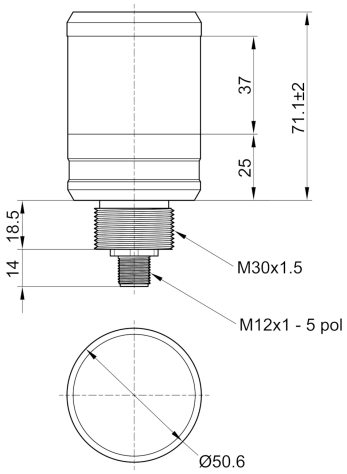

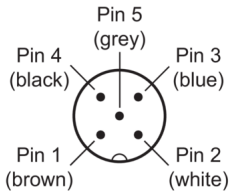

PIN	Segment / Signal	Connection cable wire color
1	Segment 1	Brown
2	Buzzer / n.c.	Whit
3	GND	Blue
4	Not connected	Black
5	Not connected	Grey

Function

Technical data (typ.)	**+20°C, 24 V DC**
Electrical features	
Service voltage	24 V DC (Supply Class 2)
Internal power consumption	55 mA (24 V DC)
Power	1.3 W (24 V)
Inverse polarity protection	Yes
Mechanical features	
Illuminated area	50 x 37 mm (Ø x H / segment)
Number of segments	1
Housing material	Aluminum (natural, Anodized)
Material	Polycarbonate (Diffusor)
Certifications, approvals	
Protection class	III
Approvals	UL
General features	
Model	Signal column
Design	Column

© di-soric . Right to change reserved . 16.05.2026 . Page 1 (2)

215664
SBT-F-R-R50-1S-B5
Signal column

Technical data (typ.)	+20°C, 24 V DC
Functional scope	
Buzzer	Without buzzer
Color selection	Red
Scope of delivery	Signal light incl. washer and M30 nut (pre-assembled)
Output, input, interface	
Number of inputs/outputs	1/0
Input level (high/low)	24V / 0V
Interface	24 V DC
Optical data	
Color	Red
Time behavior	
LED lifespan	> 50000 h
Ambient conditions	
Vibration load	10 … 55 Hz / 0.35 mm
Ambient temperature during operation	0 … +50 °C
Protection type	IP 65
Electrical connection	
Connection	Connector, M12, 5-pin
Accessories	
Connection cable	VK … /5-SB
More information / accessories	**https://www.di-soric.com/215664**

© di-soric . Right to change reserved