215246
KNS-M30/74V-B16PS-B4
Capacitive proximity sensor

- Increased voltage range of 10 ... 40 V DC
- Temperature-resistant sensor surface up to 120°C
- Metal casing
- PEEK surface, resistant to abrasive substances

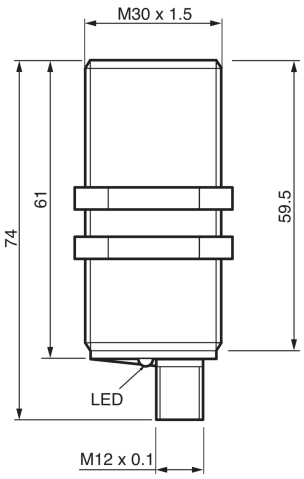

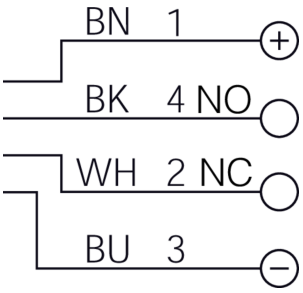

BK: black BN: brown BU: blue WH: white

Function

Technical data (typ.)	+20°C, 24 V DC
Electrical features	
Service voltage	10 … 40 V DC
No-load current (max.)	< 20 mA
Inverse polarity protection	Yes
Short-circuit protection	Yes
Insulation voltage endurance	50 V DC
Mechanical features	
Installation type	Flush
Thread	M30 x 1.5
Housing length	74 mm
Housing material	Stainless steel (AISI316L)
Material	PBT (Sensor probe)
Weight	172 g
Tightening torque	30 Nm
Certifications, approvals	
Protection class	III, operation on protective low voltage

© di-soric . Right to change reserved

215246
KNS-M30/74V-B16PS-B4
Capacitive proximity sensor

Technical data (typ.)	+20°C, 24 V DC
General features	
Operating principle	Capacitive
Design	Thread
Functional scope	
Scope of delivery	Sensor, 2 x M30 nuts, Setting tool
Output, input, interface	
Switching output	pnp, 200 mA, NO/NC
Voltage drop (max.)	1 V (200 mA)
Interface	No
Detection range, measuring range, tolerance limits	
Switching distance (SN)	16 mm (0 … 16 mm adjustable)
Standardized measuring plate	24 x 24 x 1 mm
Switching hysteresis (max.)	< 8 %
Display, operation	
Sensitivity adjustment	Potentiometer (16-turn)
Time behavior	
Switching frequency	50 Hz
Ambient conditions	
Ambient temperature during operation	-30 … +85 °C
Ambient temperature storage	-40 … +85 °C
Ambient humidity operation	35 … 95 %
Ambient humidity storage	35 … 95 %
Protection type	IP 67 / IP 68 (60 min.)
Electrical connection	
Connection	Connector, M12, 4-pin, A-coded

More information / accessories	https://www.di-soric.com/215246

© di-soric . Right to change reserved