215156
IF-200K/K-B02PS-T3
Inductive fill level sensor

- Reliable detection of bulk materials in vibratory feeders
- Robust design for mechanical influences
- Can be adapted to requirements through three different rod lengths: 100, 200 and 300 mm
- Long service life thanks to a wear-free inductive switch
- Simple monitoring through an integrated visual status display

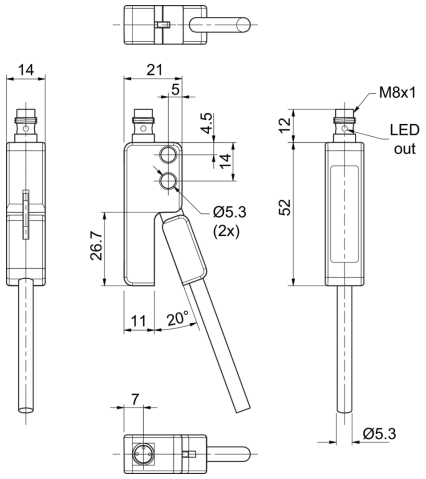

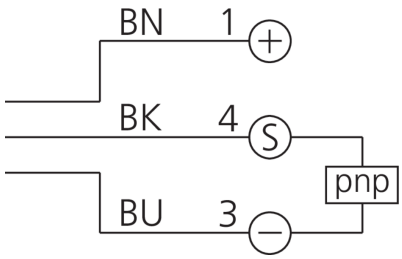

BK: black BN: brown BU: blue

Function

Technical data (typ.)	+20°C, 24 V DC
Electrical features	
Service voltage	10 … 30 V DC
Internal power consumption	10 mA
Insulation voltage endurance	< 500 V DC
Mechanical features	
Probe length	200 mm
Housing length	64 mm
Housing height	21 mm
Housing width	14 mm
Housing material	Plastic (Pendulum mechanism)
Certifications, approvals	
Protection class	III, operation on protective low voltage
General features	
Operating principle	inductive
Evaluation	digital
Design	Thread
Product series	IF-Inductive fill level sensor

© di-soric . Right to change reserved

215156
IF-200K/K-B02PS-T3
Inductive fill level sensor

Technical data (typ.)	+20°C, 24 V DC
Output, input, interface	
Switching output	pnp, 200 mA, NO
Voltage drop (max.)	1.5 V DC
Detection range, measuring range, tolerance limits	
Standardized measuring plate	24 x 24 x 1 mm
Switching hysteresis (max.)	< 10 %
Display, operation	
LED Anzeige	Yes
Time behavior	
Switching frequency	1000 Hz
Ambient conditions	
Shock/vibration load	30 g, 11 ms / 10 … 55 Hz, 1.0 mm
Ambient temperature during operation	-25 … +70 °C
Protection type	IP 67
Electrical connection	
Connection	Connector, M8, 3-pin, A-coded

More information / accessories	https://www.di-soric.com/215156

© di-soric . Right to change reserved