214900
OH33-RMN-PT-G3-T4
Retroreflective diffuse sensors with background suppression

- Compact design
- Long range
- Ideal background suppression
- Push-pull output with pnp or npn function
- Switch for light/dark switching
- IO-Link
- Measuring function
- Sensing range and window function can be parameterized in mm

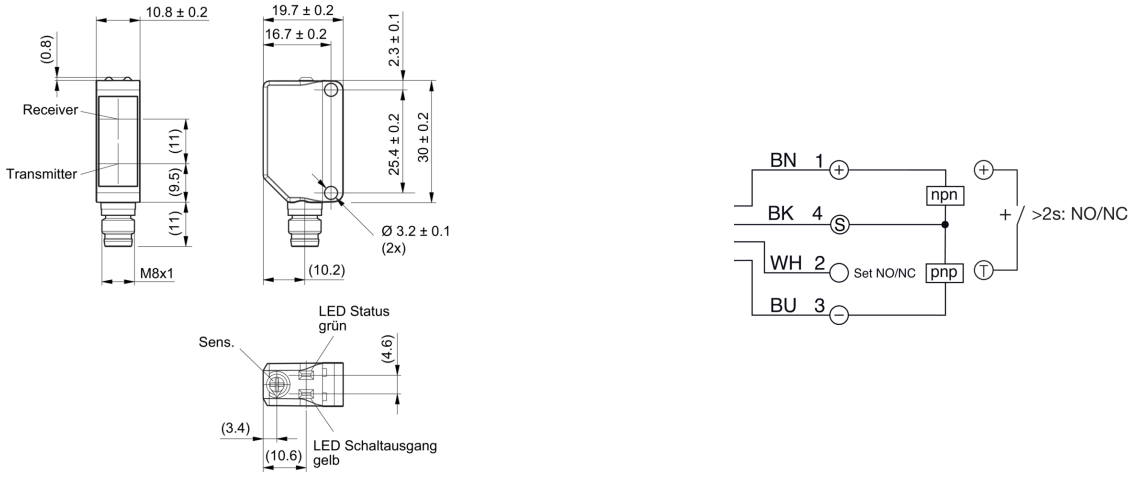

BK: black BN: brown BU: blue WH: white

Function

IO-Link

Technical data (typ.)	+20°C, 24 V DC
Electrical features	
Service voltage	10 … 30 V DC
No-load current (max.)	< 45 mA
Inverse polarity protection	Yes
Short-circuit protection	Yes
Mechanical features	
Housing dimensions	31 x 20 x 11 mm
Housing length	20 mm
Housing height	31 mm
Housing width	11 mm
Housing material	Plastic
Material	Plastic (Window / optics)
Weight	5 g
Certifications, approvals	
Protection class	III
Approvals	UL

214900
OH33-RMN-PT-G3-T4
Retroreflective diffuse sensors with background suppression

Technical data (typ.)	+20°C, 24 V DC
General features	
Operating principle	Diffuse sensor with background suppression
Evaluation	digital
Design	Cuboid design
Default setting	Switching frequency (500 Hz (STANDARD))
Output, input, interface	
Switching output	Push-pull, 100 mA, NO/NC, switchable
Voltage drop (max.)	1 V
Interface	IO-Link (V1.1, COM2 38.4 kBd, Smart Sensor Profile)
Optical data	
Light source	LED
Color	Red
Wavelength	620 nm
Background suppression	Yes
Light spot size	Ø 7 mm (at distance of 100 mm)
Detection range, measuring range, tolerance limits	
Range	20 … 200 mm
Standardized measuring plate	200 x 200 mm (white)
Display, operation	
Sensitivity adjustment	Potentiometer, IO-Link
Display	LED green - Status, yellow - Switching output 1
Time behavior	
Switching frequency	50 Hz … 500 Hz (50 Hz (PRECISION))
Ambient conditions	
Ambient temperature during operation	-25 … +60 °C
Protection type	IP 67
Electrical connection	
Connection	Connector, M8, 4-pin
Accessories	
Connection cable	TK … /4

Background suppression

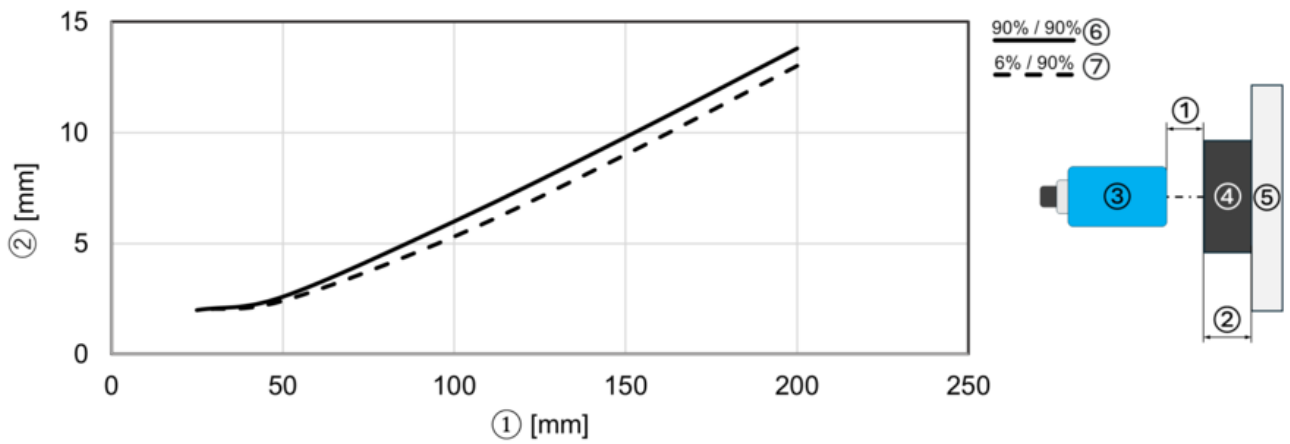

1) Distance sensor / object (mm)
2) Minimum distance between object and background (mm)
3) Sensor
4) object
5) background
6) Typical behavior - object black (6%) / background white (90%)
7) Typisches Verhalten - Objekt blanc (90%) / Hintergrund blanc (90%)

© di-soric . Right to change reserved

214900
OH33-RMN-PT-G3-T4
Retroreflective diffuse sensors with background suppression

Typical detection diagram (white 90%)

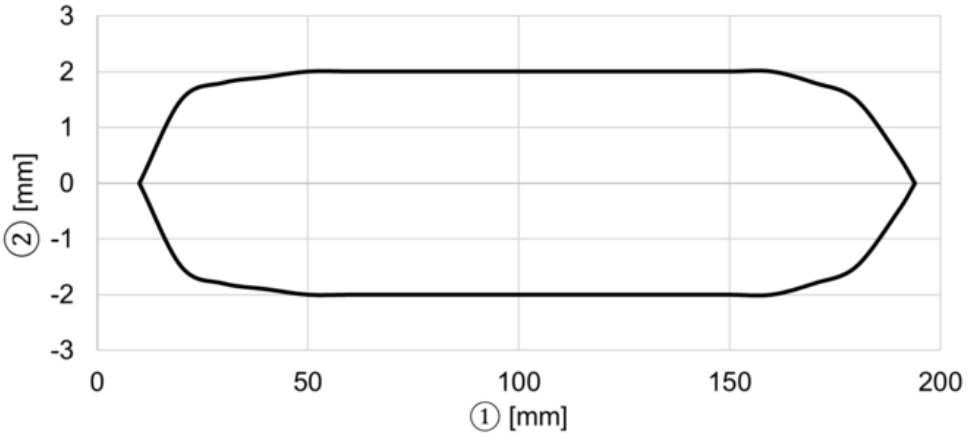

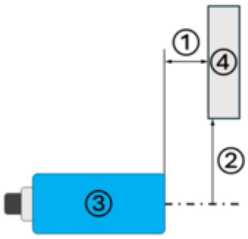

1) Distance sensor / standard targe (mm)
2) Offset (mm)
3) Sensor
4) Standard targe

More information / accessories	**https://www.di-soric.com/214900**

© di-soric . Right to change reserved