214896
OH33-LRMS-TI-G3-T4
Laser diffuse sensor with background suppression

- Compact design
- Small detection angle
- Ideal background suppression
- Laser red light with small light spot
- DD mode - simultaneous evaluation of intensity and distance
- Push-pull output with pnp or npn function
- Switch for light/dark switching
- IO-Link
- Measuring function
- Sensing range and window function can be parameterized in mm

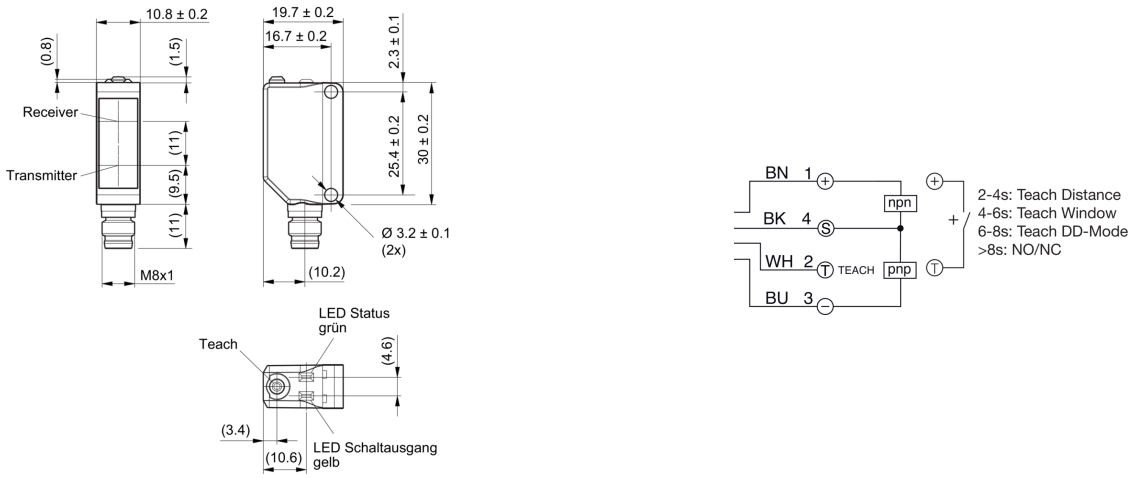

BK: black BN: brown BU: blue WH: white

Function

IO-Link

Technical data (typ.)	+20°C, 24 V DC
Electrical features	
Service voltage	10 … 30 V DC
No-load current (max.)	< 30 mA
Inverse polarity protection	Yes
Short-circuit protection	Yes
Mechanical features	
Housing dimensions	31 x 20 x 11 mm
Housing length	20 mm
Housing height	31 mm
Housing width	11 mm
Housing material	Plastic
Material	Plastic (Window / optics)
Weight	5 g
Certifications, approvals	
Protection class	III
Approvals	UL

214896
OH33-LRMS-TI-G3-T4
Laser diffuse sensor with background suppression

Technical data (typ.)	+20°C, 24 V DC
General features	
Operating principle	Diffuse sensor with background suppression
Evaluation	digital
Design	Cuboid design
Default setting	Switching frequency (350 Hz (PRECISION))
Output, input, interface	
Switching output	Push-pull, 100 mA, NO/NC, switchable
Voltage drop (max.)	1 V
Interface	IO-Link (V1.1, COM2 38.4 kBd, Smart Sensor Profile)
Optical data	
Light source	Laser
Laser class	CLASS 1 LASER PRODUCT, (IEC 60825-1:2014 / EN 60825-1:2014)
Color	Red
Wavelength	650 nm
Background suppression	Yes
Light spot size	Ø 1 mm (at distance of 300 mm)
Detection range, measuring range, tolerance limits	
Range	20 … 100 mm
Standardized measuring plate	200 x 200 mm (white)
Display, operation	
Sensitivity adjustment	Button, IO-Link
Display	LED green - Status, yellow - Switching output 1
Time behavior	
Switching frequency	350 Hz … 800 Hz (350 Hz (HIGH FUNCTIONAL RELIABILITY), 800 Hz (SPEED))
Ambient conditions	
Ambient temperature during operation	-25 … +50 °C
Protection type	IP 67
Electrical connection	
Connection	Connector, M8, 4-pin
Accessories	
Connection cable	TK … /4

© di-soric . Right to change reserved

214896
OH33-LRMS-TI-G3-T4
Laser diffuse sensor with background suppression

Background suppression - precise mode

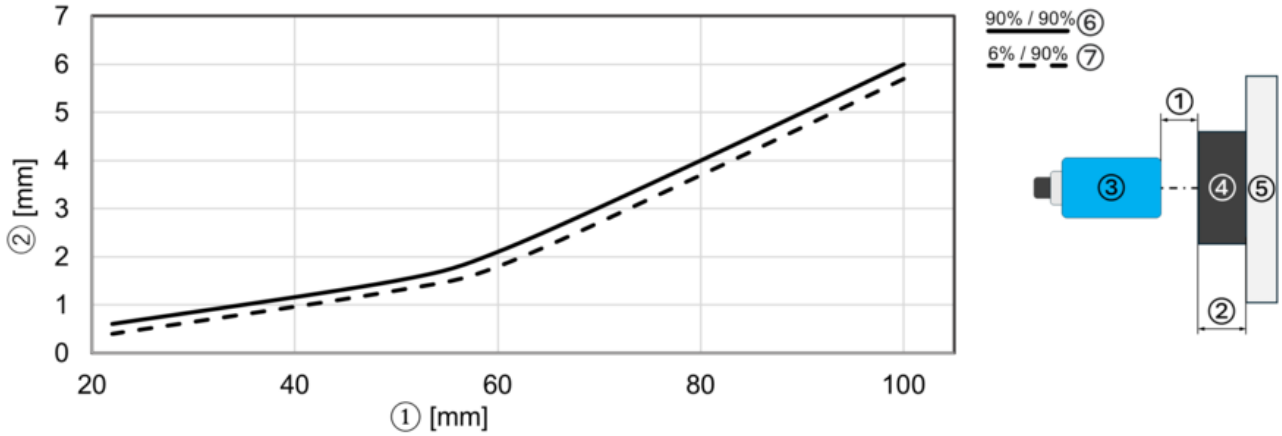

1) Distance sensor / object (mm)
2) Minimum distance between object and background (mm)
3) Sensor
4) object
5) background
6) Typical behavior - object black (6%) / background white (90%)
7) Typisches Verhalten - Objekt blanc (90%) / Hintergrund blanc (90%)

Typical detection diagram (white 90%) - Precise mode (Factory setting)

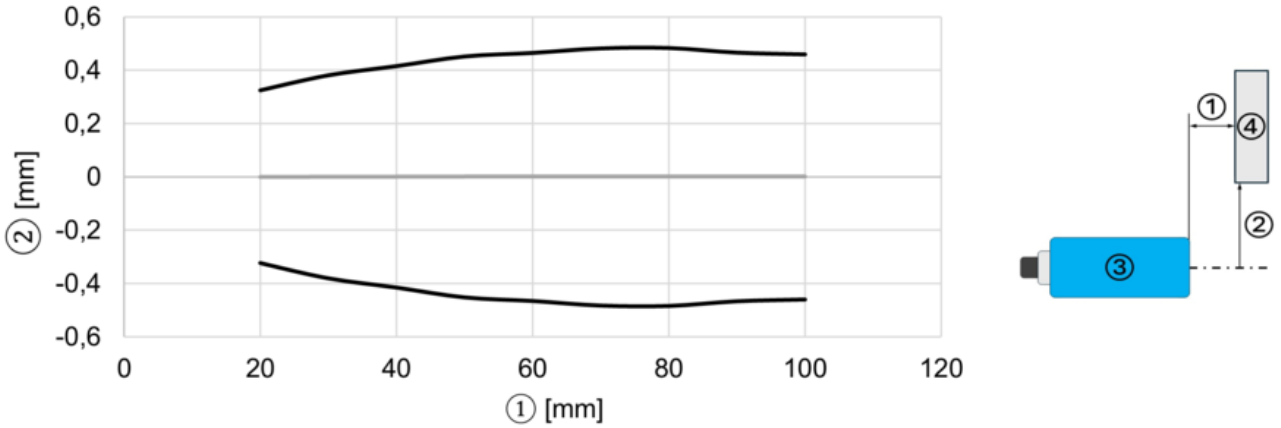

1) Distance sensor / standard targe (mm)
2) Offset (mm)
3) Sensor
4) Standard targe

Typical detection diagram (white 90%) - Fast mode

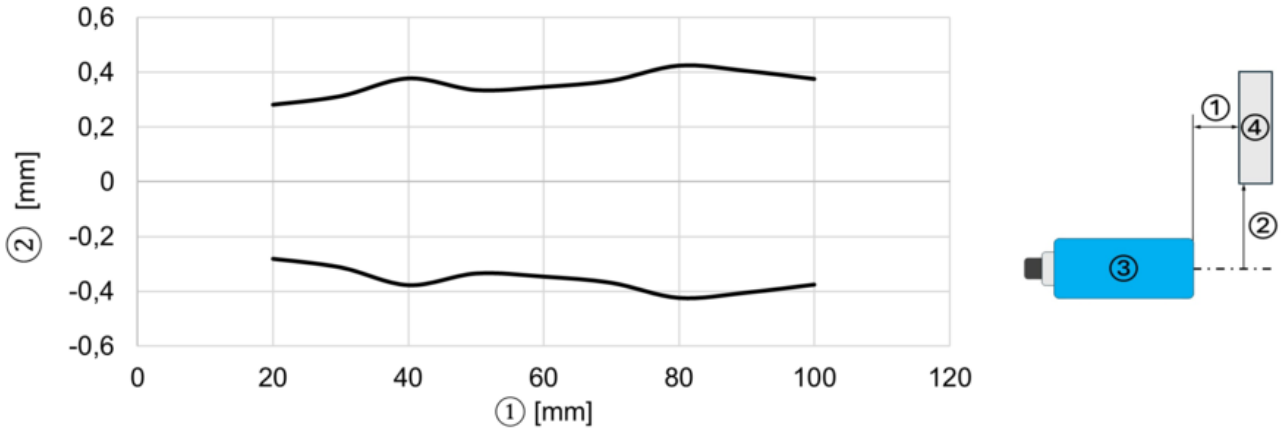

1) Distance sensor / standard targe (mm)
2) Offset (mm)
3) Sensor
4) Standard targe

© di-soric . Right to change reserved

More information / accessories	**https://www.di-soric.com/214896**

© di-soric . Right to change reserved