# 214890
# OH33-LIMN-PT-G3-T4
# Laser diffuse sensor with background suppression

- Compact design
- Long range
- Ideal background suppression
- Laser infrared light with large light spot
- Push-pull output with pnp or npn function
- Switch for light/dark switching
- IO-Link
- Measuring function
- Sensing range and window function can be parameterized in mm

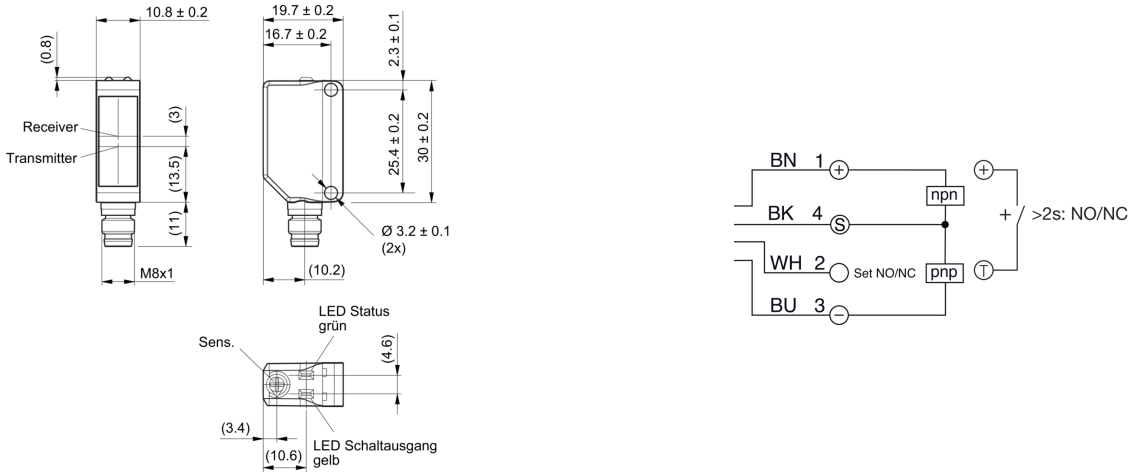


BK: black BN: brown BU: blue WH: white

**Function**

IO-Link

| Technical data (typ.) | +20°C, 24 V DC |
|---|---|
| **Electrical features** | |
| Service voltage | 10 … 30 V DC |
| No-load current (max.) | < 25 mA |
| Inverse polarity protection | Yes |
| Short-circuit protection | Yes |
| **Mechanical features** | |
| Housing dimensions | 31 x 20 x 11 mm |
| Housing length | 20 mm |
| Housing height | 31 mm |
| Housing width | 11 mm |
| Housing material | Plastic |
| Material | Plastic (Window / optics) |
| Weight | 5 g |
| **Certifications, approvals** | |
| Protection class | III |
| Approvals | UL |

# 214890
# OH33-LIMN-PT-G3-T4
# Laser diffuse sensor with background suppression

| Technical data (typ.) | +20°C, 24 V DC |
|---|---|
| **General features** | |
| Operating principle | Diffuse sensor with background suppression |
| Evaluation | digital |
| Design | Cuboid design |
| Default setting | Switching frequency (0,5 Hz (STANDARD)) |
| **Output, input, interface** | |
| Switching output | Push-pull, 100 mA, NO/NC, switchable |
| Voltage drop (max.) | 1 V |
| Interface | IO-Link (V1.1, COM2 38.4 kBd, Smart Sensor Profile) |
| **Optical data** | |
| Light source | Laser |
| Laser class | CLASS 1 LASER PRODUCT, (IEC 60825-1:2014 / EN 60825-1:2014) |
| Color | Infrared |
| Wavelength | 940 nm |
| Background suppression | Yes |
| Light spot size | Ø 18 mm (at distance of 500 mm) |
| **Detection range, measuring range, tolerance limits** | |
| Range | 0 … 1000 mm |
| Standardized measuring plate | 200 x 200 mm (white) |
| **Display, operation** | |
| Sensitivity adjustment | Potentiometer, IO-Link |
| Display | LED green - Status, yellow - Switching output 1 |
| **Time behavior** | |
| Switching frequency | 0.5 Hz … 5 Hz (5 Hz (SPEED)) |
| **Ambient conditions** | |
| Ambient temperature during operation | -25 … +50 °C |
| Protection type | IP 67 |
| **Electrical connection** | |
| Connection | Connector, M8, 4-pin |
| **Accessories** | |
| Connection cable | TK … /4 |


© di-soric . Right to change reserved

# 214890
# OH33-LIMN-PT-G3-T4
# Laser diffuse sensor with background suppression

## Background suppression

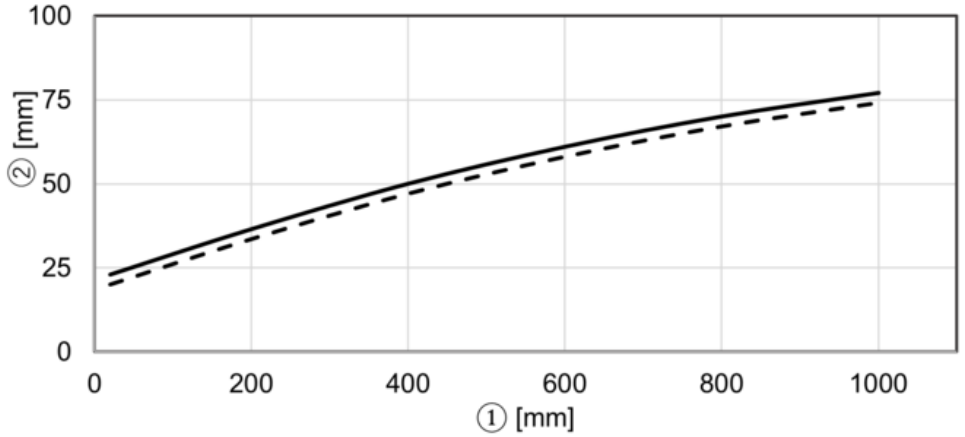


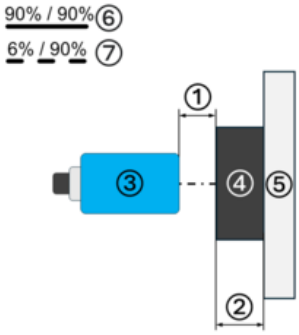


1) Distance sensor / object (mm)
2) Minimum distance between object and background (mm)
3) Sensor
4) object
5) background
6) Typical behavior - object black (6%) / background white (90%)
7) Typisches Verhalten - Objekt blanc (90%) / Hintergrund blanc (90%)

## Typical detection diagram (white 90%)

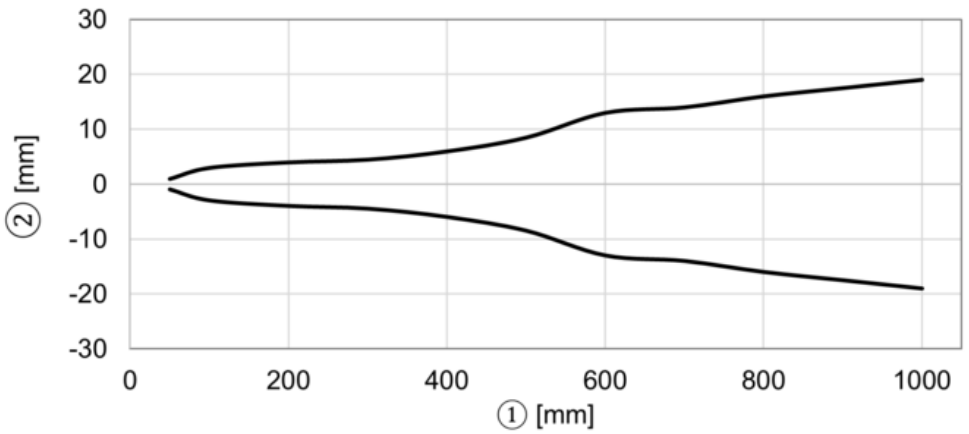


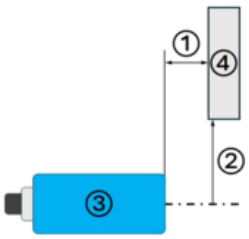


1) Distance sensor / standard targe (mm)
2) Offset (mm)
3) Sensor
4) Standard targe

| More information / accessories | https://www.di-soric.com/214890 |
|---|---|


© di-soric . Right to change reserved