214790
INE-M8/60T-B01NO-T3
Inductive proximity sensor

- Welding spark resistant due to PTFE coating
- Weld-proof
- Magnetic field test for DC/AC fields up to 150 mT

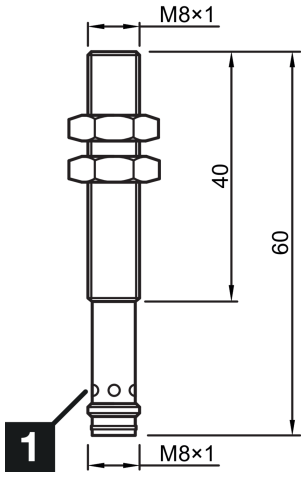

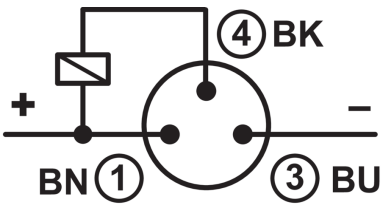

1) LED (4x)

BK: black BN: brown BU: blue

Function

Technical data (typ.)	+20°C, 24 V DC
Electrical features	
Service voltage	10 … 30 V DC
No-load current (max.)	10 mA
Inverse polarity protection	Yes
Short-circuit protection	Yes
Mechanical features	
Installation type	Flush
Thread	M8 x 1
Housing length	60 mm
Housing material	Brass (PTFE coated)
Material of sensor probe	PTFE
General features	
Operating principle	inductive
Evaluation	digital
Design	Thread
Design	Weld-proof
Product series	INE Industrial

© di-soric . Right to change reserved

214790
INE-M8/60T-B01NO-T3
Inductive proximity sensor

Technical data (typ.)	+20°C, 24 V DC
Functional scope	
Scope of delivery	Sensor, 2 x M8 nuts, 2 x washers
Output, input, interface	
Switching output	npn, 200 mA, NC
Voltage drop (max.)	1.5 V
Detection range, measuring range, tolerance limits	
Switching distance (SN)	1 mm
Switching hysteresis (max.)	15 %
Display, operation	
LED Anzeige	Yes
Time behavior	
Switching frequency	1000 Hz
Ambient conditions	
Ambient temperature during operation	-25 … +70 °C
Protection type	IP 67
Electrical connection	
Connection	Connector, M8, 3-pin

More information / accessories	https://www.di-soric.com/214790

© di-soric . Right to change reserved