214405
INE-M30/55V-B15G3-B3
Inductive proximity sensor

- IO-Link
- Short-circuit protection
- LED
- High protection type

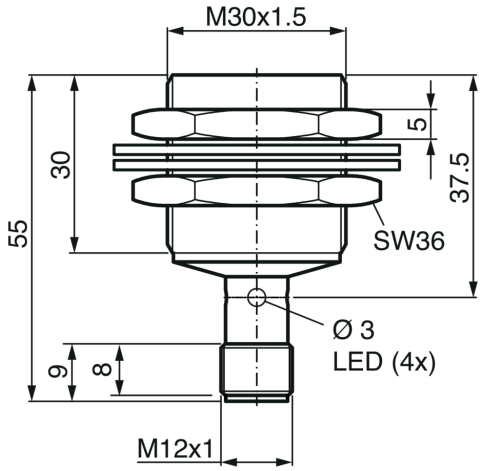

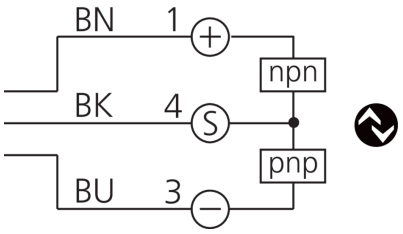

BK: black BN: brown BU: blue

Function

IO-Link

Technical data (typ.)	+20°C, 24 V DC
Electrical features	
Service voltage	10 … 36 V DC
No-load current (max.)	< 20 mA
Ripple	< 10 %
Inverse polarity protection	Yes
Short-circuit protection	Yes
Mechanical features	
Installation type	Flush
Thread	M30 x 1.5
Housing length	55 mm
Housing material	Nickel brass
Material of sensor probe	PBT
Weight	127 g
Tightening torque	30 Nm
Certifications, approvals	
Protection class	III, operation on protective low voltage
Approvals	UL

© di-soric . Right to change reserved

214405
INE-M30/55V-B15G3-B3
Inductive proximity sensor

Technical data (typ.)	+20°C, 24 V DC
General features	
Operating principle	inductive
Evaluation	digital
Design	Thread
Product series	INE Industrial
Functional scope	
Scope of delivery	Sensor, 2 x M30 nuts, 2 x washers
Output, input, interface	
Switching output	Push-pull/PNP/NPN, 200 mA, NO/NC, switchable via IO-Link
Voltage drop (max.)	2.5 V DC (100 mA)
Interface	IO-Link V1.1.5
Detection range, measuring range, tolerance limits	
Switching distance (SN)	15 mm
Standardized measuring plate	45 x 45 x 1 mm
Switching hysteresis (max.)	1 … 20 %
Display, operation	
Sensitivity adjustment	IO-Link
LED Anzeige	Yes
Display	LED green - Switching output, yellow - Overload display
Time behavior	
Switching frequency	1000 Hz
Ambient conditions	
Shock/vibration load	30 g, 11 ms / 10 … 55 Hz, 1.0 mm
Ambient temperature during operation	-40 … +70 °C
Ambient temperature storage	-40 … +80 °C
Ambient humidity operation	35 … 95 %
Ambient humidity storage	35 … 95 %
Protection type	IP 67
Electrical connection	
Connection	Connector, M12, 3-pin, A-coded

More information / accessories	https://www.di-soric.com/214405

© di-soric . Right to change reserved