213769
LI64-5-315-350T/6M
Light grids

- With evaluation electronics LVE ... / LVX ... measuring and switching
- With evaluation electronics LVB ... switching
- Beam evaluation horizontal or diagonal
- Compact design
- Aluminum housing
- Easy to install

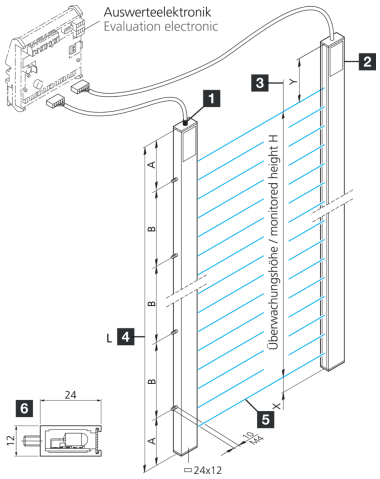

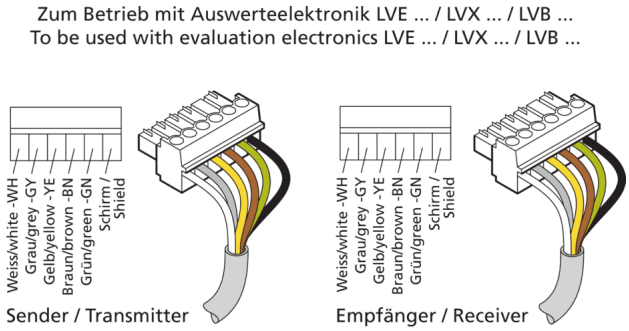

1) Transmitter
2) Receiver
3) Monitoring height H
4) Profile length L
5) Evaluation electronics
6) Profile cross section

BN: brown
GN: green
GY: grey
WH: white
YE: yellow

Function

Technical data (typ.)	+20°C, 24 V DC
Electrical features	
Service voltage	20 … 26 V DC (see evaluation electronics)
Mechanical features	
Profile cross section	12 x 58 mm
Housing height	58 mm
Housing width	12 mm
Dimension	■ X: 17.5 mm ■ Y: 17.5 mm
Profile length	350 mm
Housing material	Aluminum (natural)
Certifications, approvals	
Protection class	III, operation on protective low voltage
General features	
Evaluation	absolute, percentage, Configurable via evaluation electronics
Evaluation electronics	external

© di-soric . Right to change reserved

213769
LI64-5-315-350T/6M
Light grids

Technical data (typ.)	+20°C, 24 V DC
Output, input, interface	
Output function	Configurable via evaluation electronics
Switching output	Configurable via evaluation electronics, NO, NC
Optical data	
Light source	LED
Color	Infrared
Wavelength	880 nm
Beam evaluation	via external evaluation electronics
Detection range, measuring range, tolerance limits	
Beam separation	5 mm
Number of beams	64
Monitoring height	315 mm
Range	250 … 6000 mm (adjustable via evaluation electronics)
Measuring range	315 mm
Ambient conditions	
Ambient temperature during operation	-20 … +40 °C
Protection type	IP 54 (IP 65 optional)
Electrical connection	
Connection	Cable, 6.0 m (with plug connector, additional variants on request)

More information / accessories	https://www.di-soric.com/213769

© di-soric . Right to change reserved