213766
ID600-BM38-EP15/300
Fixed-mounted ID Reader

- Localize and Detect (Read) ID code
- Upgrade option: DPM (Direct Part Mark)
- The specialist, compact and high-performance
- High power LED illumination in red and white
- Flexible and productive Software nVision-i
- Parameter changes via linked Profinet inputs during execution
- Simple & intuitive parameterization
- Flexible working distances of 50 - 2,000 mm by changing lenses
- Customization option

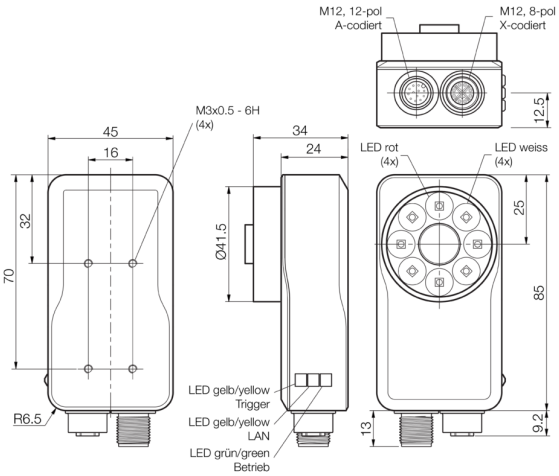

12-pol A-codiert

1	PLC_IN0	7	+UB
2	PLC_IN1	8	GND
3	OUT_2	9	NC
4	OUT_3	10	Trigger IN
5	READY	11	OUT_0
6	COMMON INTERFACE	12	OUT_1

8-pol X-codiert

1	LAN A+	5	LAN D+
2	LAN A-	6	LAN D-
3	LAN B+	7	LAN C-
4	LAN B-	8	LAN C+

Function

PROFINET INDUSTRIAL ETHERNET — EtherNet/IP™

Technical data (typ.)	+20°C, 24 V DC
Electrical features	
Service voltage	18 … 30 V DC
No-load current (max.)	1000 mA (24 V DC)
Inverse polarity protection	Yes
Short-circuit protection	Yes
Insulation voltage endurance	500 V
Mechanical features	
Housing dimensions	85 x 45 x 34 mm
Housing length	34 mm
Housing height	85 mm
Housing width	45 mm
Housing material	Die-cast zinc (Black, powder-coated)
Material	PMMA (Window / optics)
Lens connection	S-mount
Weight	265 g
Certifications, approvals	
Protection class	III, operation on protective low voltage
Risk group (DIN EN 62471)	Risk group 1
Approvals	UL

© di-soric . Right to change reserved . 15.07.2026 . Page 1 (2)

213766
ID600-BM38-EP15/300
Fixed-mounted ID Reader

Technical data (typ.)	+20°C, 24 V DC
General features	
Model	ID-600
Design	Cuboid design
Note	EtherNet/IP from nVision-i 24.1
Functional scope	
Inspection tasks	Read code (defined search area)
Shutter	global
Code type - 1D-Codes (barcodes)	Code 2 of 5, Codabar, Code 128, Code 39, Databar, UPC / EAN, Pharmacode
Code type - 2D-Codes	Aztec Code, Data Matrix, Dotcode, QR
Code type - Stacked codes	PDF 417
Scope of delivery	ID600-BM38-EP15/300, O-S1-S-080-40, CS60-WINDOW
Internal lights	High-power LED
Output, input, interface	
Switching output	Push-pull, 100 mA
Switching output number	4 (programmable, 1 (Ready))
Voltage drop (max.)	2 V
Interface	Ethernet
Protocols	TCP/IP, FTP/SFTP, Profinet, EtherNet/IP
Optical data	
Color	Red / white switchable (internal)
Focal length	8 mm (exchangeable S-mount lens)
Detection range, measuring range, tolerance limits	
Resolution	1456 x 1088 Pixel
Pixel size	3.45 x 3.45 µm
Working distance	50.0 … 2000 mm
Display, operation	
Display	LED green - Operation, yellow - DATA-Link yellow - Trigger
Time behavior	
FPS - Frames Per Second (max.)	30 images/second
Flash length	< 2 ms
Ambient conditions	
Ambient temperature during operation	0 … +50 °C
Vibration/shock resistance	10 to 55 Hz / 1.0 mm / 30 g / 11 ms
Protection type	IP 67
Electrical connection	
Connection	Connector, M12, 12-pin (A-coded)
Connection 2	Socket, M12, 8-pin (X-coded)
Cable	Connection cables max. 25 m

More information / accessories	https://www.di-soric.com/213766

© di-soric . Right to change reserved