213506
LA56-12.5-688-860I-H-RW0.2M
Light grids

- Horizontal beam evaluation
- Integrated evaluation electronics
- Switching output
- Fault alarm output
- Compact design
- Aluminum housing
- Easy to install

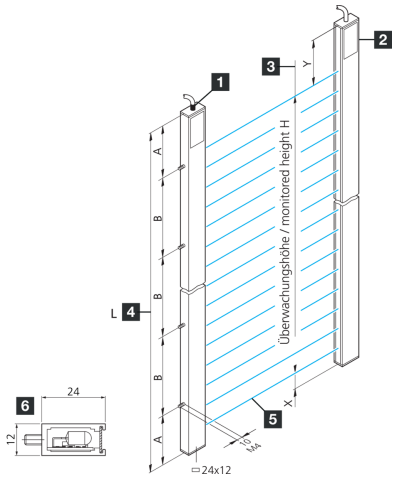

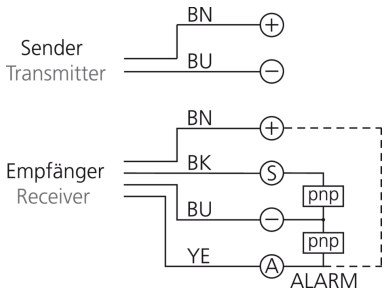

1) Transmitter
2) Receiver
3) Monitoring height H
4) Profile length L
5) Synchronous beam
6) Profile cross section

BK: black BN: brown BU: blue YE: yellow

Function

Technical data (typ.)	+20°C, 24 V DC
Electrical features	
Service voltage	20.4 … 28.8 V DC
Power consumption	8 W
Mechanical features	
Assembly	Threaded bolt (2)
Profile cross section	12 x 24 mm
Housing height	24 mm
Housing width	12 mm
Dimension	■ A: 80 mm ■ B: 700 mm ■ X: 13.5 mm ■ Y: 153.5 mm
Profile length	860 mm
Housing material	Aluminum (silver, Anodized)
Certifications, approvals	
Protection class	III, operation on protective low voltage
EMC directives	EN 61000-6-3:2001 / EN 61000-6-1:2001

213506
LA56-12.5-688-860I-H-RW0.2M
Light grids

Technical data (typ.)	+20°C, 24 V DC
General features	
Evaluation	horizontal
Evaluation electronics	integrated
Output, input, interface	
Output function	Light switching
Switching output	pnp, 200 mA, NC, short-circuit-proof
Optical data	
Light source	LED
Color	Infrared
Wavelength	880 nm
Beam evaluation	via integrated evaluation electronics
Detection range, measuring range, tolerance limits	
Beam separation	12.5 mm
Number of beams	56
Monitoring height	688 mm
Range	200 … 1000 mm (factory setting)
Display, operation	
Display	LED (Service voltage / output stage, error (alarm))
Time behavior	
Cycle time per light beam	1 ms
Total cycle time	Anzahl Lichtstrahlen x 1 ms + 4 ms
Basic processing time	4 ms
Ambient conditions	
Ambient temperature during operation	-10 … +45 °C
Protection type	IP 54 (IP 65 optional)
Electrical connection	
Connection	Cable, 4.0 m (with ferrule)

More information / accessories	https://www.di-soric.com/213506

© di-soric . Right to change reserved