# 213214
# INSM-M05-B01NS-T3
# Inductive proximity sensor

- Double switching distance
- Metal connector M8
- Short-circuit protection
- LED switching status display
- High protection type

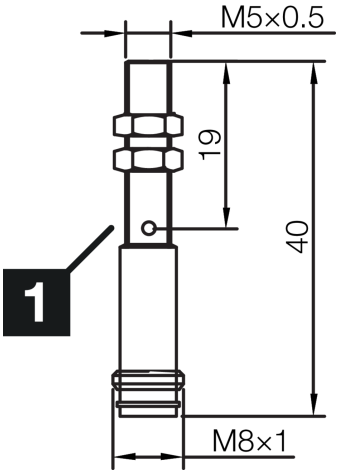


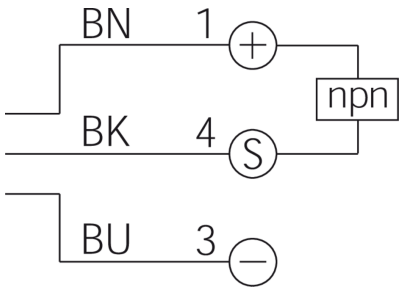


1) LED

BK: black BN: brown BU: blue

**Function**

| Technical data (typ.) | +20°C, 24 V DC |
|---|---|
| **Electrical features** | |
| Service voltage | 10 … 30 V DC |
| Internal power consumption | 10 mA |
| Insulation voltage endurance | < 500 V DC |
| **Mechanical features** | |
| Installation type | Flush |
| Thread | M5 x 0.5 |
| Housing length | 40 mm |
| Housing material | Stainless steel (V4A) |
| **Certifications, approvals** | |
| Protection class | III, operation on protective low voltage |
| **General features** | |
| Operating principle | inductive |
| Evaluation | digital |
| Design | Thread |
| Characteristics | Double switching distance |
| Design | Miniature design |
| Product series | INM Miniature |


© di-soric . Right to change reserved

# 213214
# INSM-M05-B01NS-T3
# Inductive proximity sensor

| Technical data (typ.) | +20°C, 24 V DC |
|---|---|
| **Functional scope** | |
| Scope of delivery | Sensor, 2 x M5 nuts, 2 x washers |
| **Output, input, interface** | |
| Switching output | npn, 200 mA, NO |
| Voltage drop (max.) | 1.5 V DC |
| **Detection range, measuring range, tolerance limits** | |
| Switching distance (SN) | 1 mm |
| Standardized measuring plate | 5 x 5 x 1 mm |
| Switching hysteresis (max.) | < 10 % |
| **Display, operation** | |
| LED Anzeige | Yes |
| **Time behavior** | |
| Switching frequency | 2000 Hz |
| **Ambient conditions** | |
| Ambient temperature during operation | -25 … +70 °C |
| Protection type | IP 67 |
| **Electrical connection** | |
| Connection | Connector, M8, 3-pin, A-coded |

| More information / accessories | https://www.di-soric.com/213214 |
|---|---|


© di-soric . Right to change reserved