213180
INS-M08-N04NS-T3
Inductive proximity sensor

- Double switching distance
- Metal connector M8
- Short-circuit protection
- LED switching status display
- High protection type

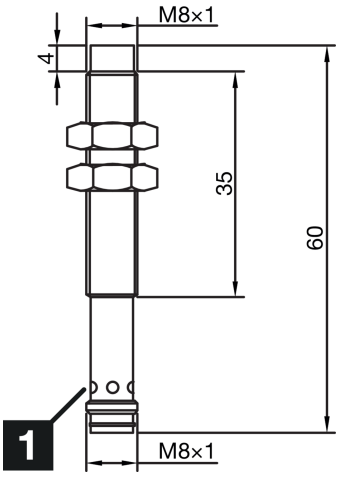

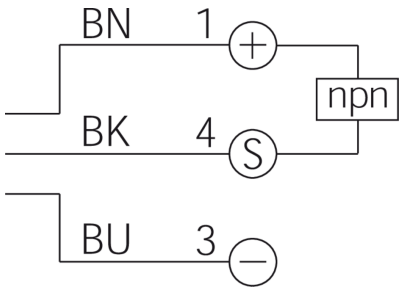

1) LED

BK: black BN: brown BU: blue

Function

Technical data (typ.)	+20°C, 24 V DC
Electrical features	
Service voltage	10 … 30 V DC
Internal power consumption	10 mA
Insulation voltage endurance	< 500 V DC
Mechanical features	
Installation type	non-flush
Thread	M8 x 1
Housing length	60 mm
Housing material	Stainless steel (V4A)
Certifications, approvals	
Protection class	III, operation on protective low voltage
General features	
Operating principle	inductive
Evaluation	digital
Design	Thread
Characteristics	Double switching distance
Product series	INS Standard

© di-soric . Right to change reserved

213180
INS-M08-N04NS-T3
Inductive proximity sensor

Technical data (typ.)	+20°C, 24 V DC
Functional scope	
Scope of delivery	Sensor, 2 x M8 nuts, 2 x washers
Output, input, interface	
Switching output	npn, 200 mA, NO
Voltage drop (max.)	1.5 V DC
Detection range, measuring range, tolerance limits	
Switching distance (SN)	4 mm
Standardized measuring plate	12 x 12 x 1 mm
Switching hysteresis (max.)	< 10 %
Display, operation	
LED Anzeige	Yes
Time behavior	
Switching frequency	1000 Hz
Ambient conditions	
Ambient temperature during operation	-25 … +70 °C
Protection type	IP 67
Electrical connection	
Connection	Connector, M8, 3-pin, A-coded

More information / accessories	https://www.di-soric.com/213180

© di-soric . Right to change reserved