212930
US Q12 M 400 XP G3-T4
Ultrasonic sensor

- IO-Link
- Fill level detection in step feeder
- Potentiometer for adjustment
- Low installation depth
- Very narrow detection beam / small blind zone
- Switching function NO/NC switchable
- Resistant to dirt
- Small design
- Robust metal housing
- Protection class IP 67

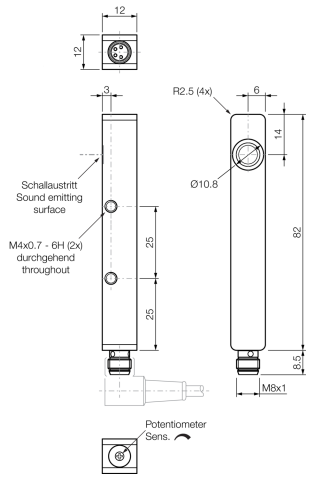

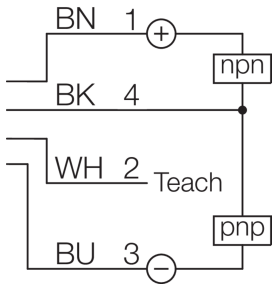

BK: black BN: brown BU: blue WH: white

Function

NO+NC IO-Link

Technical data (typ.)	+20°C, 24 V DC
Electrical features	
Service voltage	18 … 30 V DC
No-load current (max.)	40 mA (24 V DC)
Inverse polarity protection	Yes
Short-circuit protection	Yes
Insulation voltage endurance	500 V
Mechanical features	
Housing dimensions	12 x 12 x 82 mm
Housing length	82 mm
Housing height	12 mm
Housing width	12 mm
Transmission exit	radial
Assembly distance (sensor to sensor)	250 mm
Housing material	Aluminum (Black, Anodized)
Material	Epoxy resin, PUR (Transducer surface)
Weight	30 g

© di-soric . Right to change reserved . 25.02.2026 . Page 1 (2)

212930
US Q12 M 400 XP G3-T4
Ultrasonic sensor

Technical data (typ.)	+20°C, 24 V DC
Certifications, approvals	
Protection class	III, operation on protective low voltage
Approvals	UL
General features	
Operating principle	Ultrasonic sensor, Ultrasonic barrier, Fill level step feeder
Evaluation	digital
Design	Cuboid design
Characteristics	IO-Link
Parallel operation possible	No
Output, input, interface	
Switching output	Push-pull, 150 mA, NO/NC, switchable
Max. switch current	150 mA
Voltage drop (max.)	2 V
Interface	IO-Link (V1.1, COM2 38.4 kBd, Smart Sensor Profile)
Detection range, measuring range, tolerance limits	
Nominal switching distance (Sn)	400 mm
Range	40 … 400 mm
Adjustment range	40 … 400 mm (Potentiometer)
Resolution	1.0 mm
Standardized measuring plate	100 x 100 mm
Switching hysteresis (max.)	2 … 20 mm (Adjustable by IO-Link)
Reproducibility	< 0.5 mm
Display, operation	
Sensitivity adjustment	Potentiometer
Display	LED green - Status, 1x yellow - Switching output
Time behavior	
Ultrasonic frequency	300 kHz
Switching frequency	< 10 Hz
Readiness delay (max.)	300 ms
Ambient conditions	
Shock/vibration load	30 g, 11 ms / 10 … 55 Hz, 1.0 mm
Ambient temperature during operation	-25 … +70 °C
Temperature drift	0.2 %/K (uncompensated)
Protection type	IP 67
Electrical connection	
Connection	Connector, M8, 4-pin
Accessories	
Connection cable	TK … /4

More information / accessories	https://www.di-soric.com/212930

© di-soric . Right to change reserved