212855
LAT52-80IU-B5
Laser distance sensors

- IO-Link
- Precisely linearized object detection
- Large detection range
- 3 operating modes as an IO-Link parameter
- Laser class 1
- Red-light laser, with small laser spot
- Easy to operate
- Robust metal housing

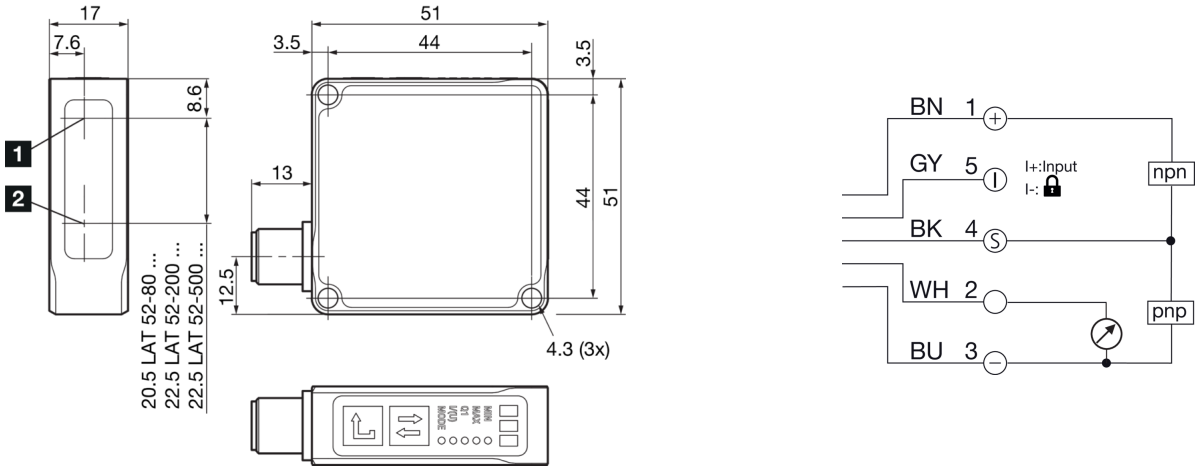

1) Light aperture
2) Receiver

BK: black
BN: brown
BU: blue
GY: grey
WH: white

Function

IO-Link

Technical data (typ.)	+20°C, 24 V DC
Electrical features	
Service voltage	18 … 30 V DC (Supply Class 2)
No-load current (max.)	60 mA
Insulation voltage endurance	500 V
Mechanical features	
Housing dimensions	51 x 51 x 17 mm
Housing length	51 mm
Housing height	51 mm
Housing width	17 mm
Housing material	Die-cast zinc (Black, powder-coated)
Material window / optics	Plastic
Weight	102 g
Certifications, approvals	
Protection class	III, operation on protective low voltage
Approvals	UL
General features	
Design	Cuboid design

© di-soric . Right to change reserved . 06.02.2026 . Page 1 (2)

212855
LAT52-80IU-B5
Laser distance sensors

Technical data (typ.)	+20°C, 24 V DC
Functional scope	
Operation modes	Standard operating modes: General applications, Speed: Quick measurement (measuring rate 1,200 Hz), Power: For dark objects
Output, input, interface	
Switching output	Push-pull (1x), 100 mA, NO/NC
Voltage drop (max.)	2 V
Analog output	0 … 10 V, 4 … 20 mA
Interface	■ IO-Link V1.1, COM2 ■ Smart Sensor Profile
Optical data	
Light source	Laser
Laser class	CLASS 1 LASER PRODUCT, (IEC 60825-1:2014 / EN 60825-1:2014)
Color	Red
Wavelength	650 nm (Pp < 0.65 mW t = 4 µs)
Light spot size	Ø 0.5 mm
Detection range, measuring range, tolerance limits	
Measuring range	30 … 80 mm (6 to 90 % remission)
Resolution	0.01 mm (Mode: Standard, median value 16)
Reproducibility	0.02 mm, Mode: Standard, median value 16
Linearity error	± 0.05 mm (Mode: Standard, median value 16)
Display, operation	
Sensitivity adjustment	Keypad
Display	LED green - Status, yellow - Switching output, Red - Signal weak
Time behavior	
Measuring frequency	1000 Hz, (max. 1200 Hz in Speed sensor mode without filter)
Readiness delay (max.)	300 ms
Ambient conditions	
Shock/vibration load	30 g, 10 … 55 Hz / 0.5 mm
Ambient temperature during operation	0 … +50 °C
Temperature drift	0.04 %/K
Protection type	IP 67
Electrical connection	
Connection	Connector, M12, 5-pin
Accessories	
Connection cable	VK … /5

More information / accessories	https://www.di-soric.com/212855

© di-soric . Right to change reserved