210628
OGL 121 G3-T3
Angled light barrier

- 4 operating modes as an IO-Link parameter
- Switch-on/off delay as an IO-Link parameter
- Diagnostics with IO-Link
- Metal casing
- Sensitivity is adjustable
- High switching frequency
- Light/dark switching
- Bright ring LED
- High protection type

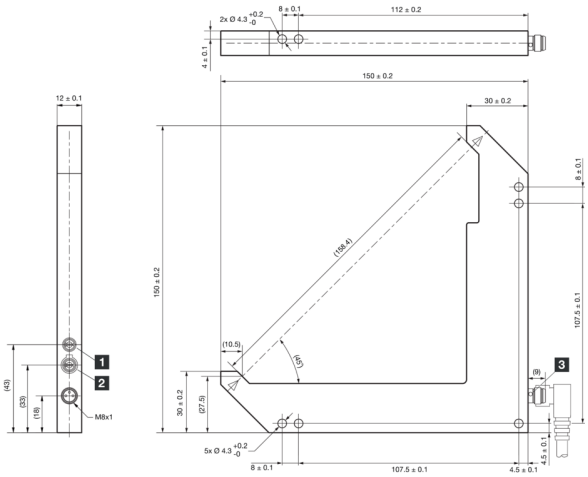

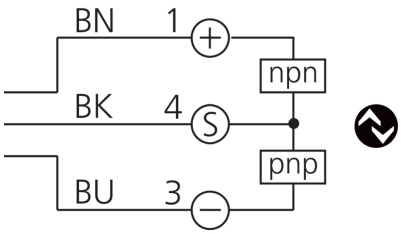

1) Potentiometer
2) NO/ NC
3) LED

BK: black BN: brown BU: blue

Function

IO-Link

Technical data (typ.)	+20°C, 24 V DC
Electrical features	
Service voltage	10 … 30 V DC (Supply Class 2)
No-load current (max.)	40 mA
Insulation voltage endurance	500 V
Mechanical features	
Leg length internal	120/120 mm
Housing dimensions	150 x 150 x 12 mm
Housing length	150 mm
Housing height	150 mm
Housing width	12 mm
Housing material	Die-cast zinc (powder-coated)
Material	Mineral glass (Optics)
Certifications, approvals	
Protection class	III, operation on protective low voltage
Approvals	UL

© di-soric . Right to change reserved . 05.02.2026 . Page 1 (2)

210628
OGL 121 G3-T3
Angled light barrier

Technical data (typ.)	+20°C, 24 V DC
General features	
Operating principle	Optical
Evaluation	digital
Design	Angle
Output, input, interface	
Switching output	Push-pull, 100 mA, NO/NC, switchable
Voltage drop (max.)	1 V
Interface	IO-Link (V1.1, COM2 38.4 kBd, Smart Sensor Profile)
Optical data	
Light source	LED
Color	Red
Wavelength	660 nm
Modulation	Clocked
Ambient light immunity	20 kLx
Detection range, measuring range, tolerance limits	
Range	158 mm (optical axis)
Resolution (factory setting)	0.5 mm (STANDARD)
Reproducibility (factory setting)	0.03 mm (STANDARD)
Resolution (STANDARD)	0.5 mm
Reproducibility (STANDARD)	0.03 mm
Resolution (HIGH RESOLUTION)	0.4 mm
Reproducibility (HIGH RESOLUTION)	0.03 mm
Resolution (POWER)	1.5 mm
Reproducibility (POWER)	0.03 mm
Resolution (SPEED)	0.5 mm
Reproducibility (SPEED)	0.03 mm
Display, operation	
Sensitivity adjustment	Potentiometer
Time behavior	
Switching frequency (factory setting)	5000 Hz (STANDARD)
Switching frequency (STANDARD)	5000 Hz
Switching frequency (HIGH RESOLUTION)	1500 Hz
Switching frequency (POWER)	250 Hz
Switching frequency (SPEED)	8000 Hz
Ambient conditions	
Shock/vibration load	30 g, 10 … 55 Hz / 0.5 mm
Ambient temperature during operation	-25 … +60 °C
Protection type	IP 67
Electrical connection	
Connection	Connector, M8, 3-pin
Accessories	
Connection cable	TK …

More information / accessories	https://www.di-soric.com/210628

© di-soric . Right to change reserved