210401
DCC 05 V 0.8 PSLK/2mPUR
Inductive proximity sensor

- Stainless steel housing
- Highly flexible cable
- Integrated amplifier
- Short-circuit protection
- Starting pulse suppression
- LED

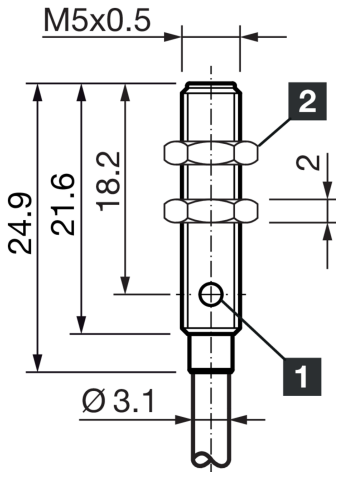

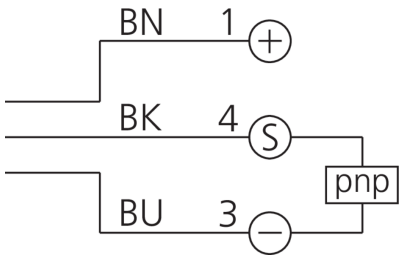

1) LED 2) Width over flats 7 mm BK: black BN: brown BU: blue

Function

Technical data (typ.)	+20°C, 24 V DC
Electrical features	
Service voltage	10 … 30 V DC
Internal power consumption	< 10 mA
Insulation voltage endurance	500 V
Mechanical features	
Installation type	Flush
Thread	M5 x 0.5
Housing length	24.9 mm
Housing material	Stainless steel (AISI303)
Material of cable	Polyurethane
Material of sensor probe	PBT
Tightening torque	1.5 Nm
Certifications, approvals	
Protection class	III, operation on protective low voltage
General features	
Operating principle	inductive
Evaluation	digital
Design	Thread

© di-soric . Right to change reserved

210401
DCC 05 V 0.8 PSLK/2mPUR
Inductive proximity sensor

Technical data (typ.)	+20°C, 24 V DC
Design	Miniature design
Product series	INM Miniature
Output, input, interface	
Switching output	pnp, 100 mA, NO
Voltage drop (max.)	1.5 V (100 mA)
Detection range, measuring range, tolerance limits	
Switching distance (SN)	0.8 mm
Standardized measuring plate	4 x 4 x 1 mm
Switching hysteresis (max.)	1 … 20 %
Display, operation	
LED Anzeige	Yes
Time behavior	
Switching frequency	5000 Hz
MTTFd	1304 Years
MTBF	652 Years
Ambient conditions	
Ambient temperature during operation	-25 … +70 °C
Protection type	IP 67
Electrical connection	
Connection	Cable, 2.0 m (flying leads)

More information / accessories	https://www.di-soric.com/210401

© di-soric . Right to change reserved