210385
DCC 05 V 1.5 PSLK
Inductive proximity sensor

- Stainless steel housing
- Highly flexible cable
- Integrated amplifier
- Short-circuit protection
- Starting pulse suppression
- LED

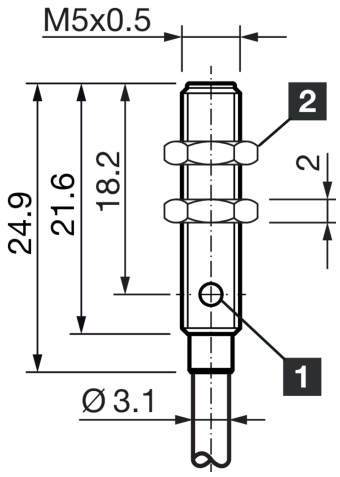

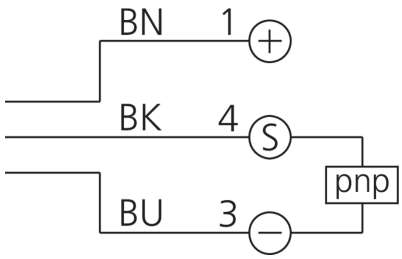

1) LED 2) Width over flats 7 mm BK: black BN: brown BU: blue

Function

Technical data (typ.)	+20°C, 24 V DC
Electrical features	
Service voltage	10 … 30 V DC
Internal power consumption	< 10 mA
Insulation voltage endurance	500 V
Mechanical features	
Installation type	Flush
Thread	M5 x 0.5
Housing length	24.9 mm
Housing material	Stainless steel (AISI303)
Material of cable	PVC
Material of sensor probe	PBT
Certifications, approvals	
Protection class	III, operation on protective low voltage
General features	
Operating principle	inductive
Evaluation	digital
Design	Thread
Characteristics	increased operating distance

© di-soric . Right to change reserved

210385
DCC 05 V 1.5 PSLK
Inductive proximity sensor

Technical data (typ.)	+20°C, 24 V DC
Design	Miniature design
Product series	INM Miniature
Functional scope	
Scope of delivery	Sensor, 2 x M5 nuts, 2 x washers
Output, input, interface	
Switching output	pnp, 100 mA, NO
Voltage drop (max.)	1.5 V (100 mA)
Detection range, measuring range, tolerance limits	
Switching distance (SN)	1.5 mm
Standardized measuring plate	4 x 4 x 1 mm
Switching hysteresis (max.)	1 … 20 %
Display, operation	
LED Anzeige	Yes
Time behavior	
Switching frequency	5000 Hz
MTTFd	1304 Years
MTBF	652 Years
Ambient conditions	
Ambient temperature during operation	-25 … +70 °C
Protection type	IP 67
Electrical connection	
Connection	Cable, 2.0 m (flying leads)

More information / accessories	https://www.di-soric.com/210385

© di-soric . Right to change reserved