210258
UGUTI 6/70 G6-B5
Ultrasonic label sensor

- Detection of metallized foil, transparent and paper labels
- Intuitive teach-in using a membrane keyboard and with fine adjustment
- High reproducibility
- Short response time
- Robust metal housing
- Large fork width and fork depth
- Remote teach with key-lock function
- IO-Link parameters with IO-Link switch-on and switch-off delay
- Multi output (Pin2) stability (factory setting) / label recognized
- Parallel operation Pin2 / label detected and IO-Link (pin 4)

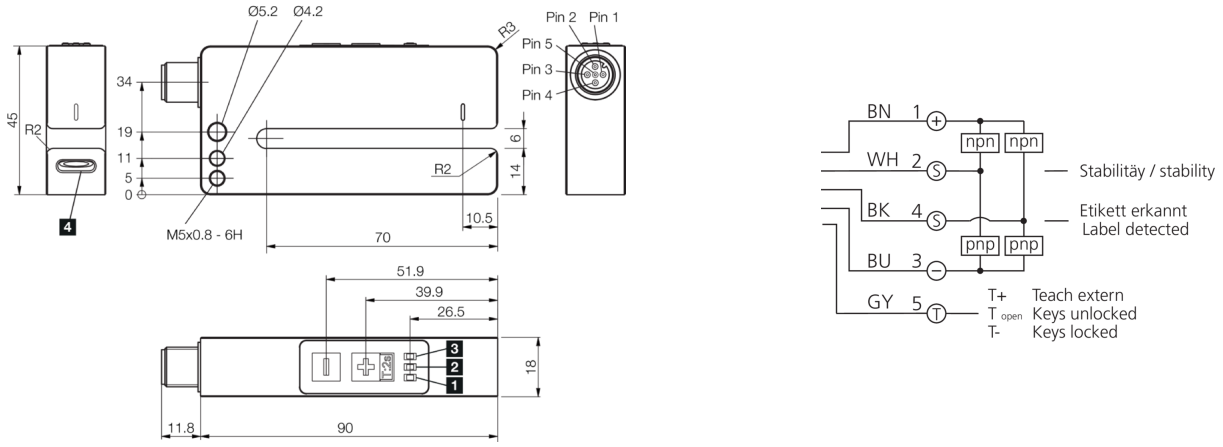

1) LED STATUS
2) LED SWITCHING OUTPUT
3) LED STABILITY
4) Blow-out opening

BK: black
BN: brown
BU: blue
GY: grey
WH: white

Function

IO-Link

Technical data (typ.)	+20°C, 24 V DC
Electrical features	
Service voltage	18 … 30 V DC
No-load current (max.)	40 mA
Insulation voltage endurance	500 V
Mechanical features	
Fork opening	6 mm
Leg length internal	70 mm
Housing dimensions	45 x 18 x 90 mm
Housing length	90 mm
Housing height	45 mm
Housing width	18 mm
Housing material	Aluminum (Black, Anodized)
Certifications, approvals	
Protection class	III, operation on protective low voltage
Approvals	UL

© di-soric . Right to change reserved

210258
UGUTI 6/70 G6-B5
Ultrasonic label sensor

Technical data (typ.)	+20°C, 24 V DC
General features	
Operating principle	Ultrasonic through-beam sensor
Evaluation	digital
Design	Fork
Characteristics	Connector outlet at the back
Product series	UGUTI Ultrasonic
Output, input, interface	
Switching output	Push-pull (2x), NO/NC, switchable
Max. switch current	100 mA (each output)
Interface	IO-Link (V1.1, COM2 38.4 kBd, Smart Sensor Profile)
Detection range, measuring range, tolerance limits	
Label interspace	> 2 mm
Label thickness	< 5.9 mm
Reproducibility	± 0.2 mm
Display, operation	
Sensitivity adjustment	Remote teach, Keypad
Display	LED green - Status, yellow - Switching output, Red - Stability insufficient
Time behavior	
Response time	0.25 ms
Readiness delay (max.)	180 ms
Ambient conditions	
Ambient temperature during operation	0 … +60 °C
Protection type	IP 67
Electrical connection	
Connection	Connector, M12, 5-pin

More information / accessories	https://www.di-soric.com/210258

© di-soric . Right to change reserved