# 209593
# LI 104-12.5-1288-1340 I
# Light grids

- With evaluation electronics LVE ... / LVX ... measuring and switching
- With evaluation electronics LVB ... switching
- Beam evaluation horizontal or diagonal
- Compact design
- Aluminum housing
- Easy to install

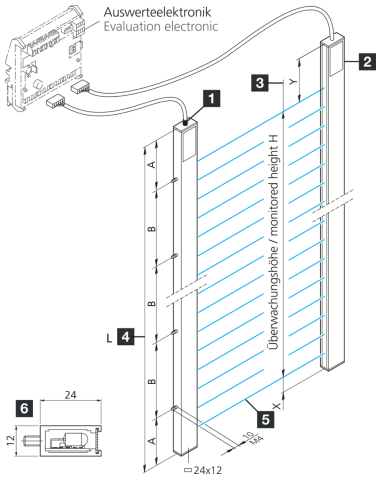


Zum Betrieb mit Auswerteelektronik LVE ... / LVX ... / LVB ...
To be used with evaluation electronics LVE ... / LVX ... / LVB ...

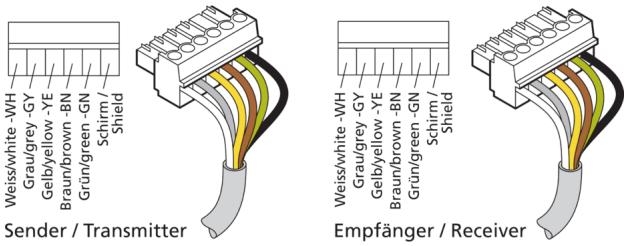


1) Transmitter
2) Receiver
3) Monitoring height H
4) Profile length L
5) Evaluation electronics
6) Profile cross section

BN: brown
GN: green
GY: grey
WH: white
YE: yellow

## Function

| Technical data (typ.) | +20°C, 24 V DC |
|---|---|
| **Electrical features** | |
| Service voltage | 20 … 26 V DC (see evaluation electronics) |
| **Mechanical features** | |
| Assembly | Threaded bolt (3) |
| Profile cross section | 12 x 24 mm |
| Housing height | 24 mm |
| Housing width | 12 mm |
| Dimension | ■ A: 70 mm<br>■ B: 600 mm<br>■ X: 13.5 mm<br>■ Y: 38.5 mm |
| Profile length | 1340 mm |
| Housing material | Aluminum (natural) |
| **Certifications, approvals** | |
| Protection class | III, operation on protective low voltage |


© di-soric . Right to change reserved

# 209593
# LI 104-12.5-1288-1340 I
# Light grids

| Technical data (typ.) | +20°C, 24 V DC |
|---|---|
| **General features** | |
| Evaluation | absolute, percentage, Configurable via evaluation electronics |
| Evaluation electronics | external |
| **Output, input, interface** | |
| Output function | Configurable via evaluation electronics |
| Switching output | Configurable via evaluation electronics, NO, NC |
| **Optical data** | |
| Light source | LED |
| Color | Infrared |
| Wavelength | 880 nm |
| Beam evaluation | via external evaluation electronics |
| **Detection range, measuring range, tolerance limits** | |
| Beam separation | 12.5 mm |
| Number of beams | 104 |
| Monitoring height | 1288 mm |
| Range | 250 … 6000 mm (adjustable via evaluation electronics) |
| Measuring range | 1288 mm |
| **Ambient conditions** | |
| Ambient temperature during operation | -20 … +40 °C |
| Protection type | IP 54 (IP 65 optional) |
| **Electrical connection** | |
| Connection | Cable, 4.0 m (with plug connector, additional variants on request) |

| More information / accessories | https://www.di-soric.com/209593 |
|---|---|


© di-soric . Right to change reserved