# 208175
# BEK-A100-G2T-K-BS
# Barlight

- Extremely high illuminance due to the most modern high-power LEDs
- Integrated power control with high efficiency
- Intelligent temperature control with switch-off automatic
- Homogeneous light field thanks to special LED optics
- High protection type
- Separate inputs for trigger signal and trigger polarity
- Robust metal housing
- Universal mounting options
- Scratch-resistant safety screen
- Crossbars and attachment optics available as an option

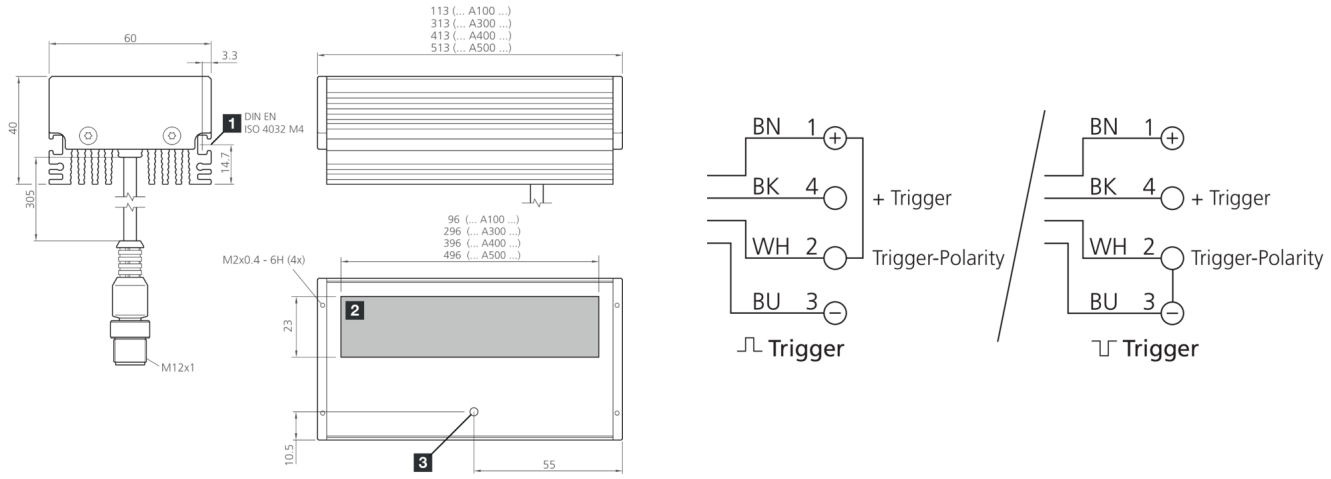


1) Mounting groove for nut
2) Illuminated area
3) LED OPERATION

BK: black BN: brown BU: blue WH: white

## Function

| Technical data (typ.) | +20°C, 24 V DC |
|---|---|
| **Electrical features** | |
| Service voltage | 18 … 30 V DC (Supply Class 2) |
| Internal power consumption | 550 mA (24 V DC) |
| Power | 13.0 W (24 V DC) |
| Inverse polarity protection | Yes |
| **Mechanical features** | |
| Illuminated area | 96 x 23 mm |
| Housing dimensions | 40 x 60 x 113 mm |
| Housing length | 113 mm |
| Housing height | 40 mm |
| Housing width | 60 mm |
| Housing material | Aluminum (Black, Anodized) |
| Material | PMMA, hardcoated (Safety screen) |
| Weight | 470 g |
| **Certifications, approvals** | |
| Protection class | III, operation on protective low voltage |
| Risk group (DIN EN 62471) | Free group |
| Approvals | UL |


© di-soric . Right to change reserved

# 208175
# BEK-A100-G2T-K-BS
# Barlight

| Technical data (typ.) | +20°C, 24 V DC |
|---|---|
| **General features** | |
| Design | Barlight |
| **Output, input, interface** | |
| Trigger input high level | 3.3 … 30.0 V |
| Trigger input low level | < 2.8 V |
| **Optical data** | |
| Light source | LED |
| Color | Green |
| Wavelength | 528 nm |
| Deflection angle FWHM | 30° |
| Light intensity | ■ 125 kLx (100.0 mm)<br>■ 58.0 kLx (200.0 mm)<br>■ 13.0 kLx (500.0 mm) |
| **Display, operation** | |
| Control | Integrated power control |
| Display | LED green - Operating display |
| **Ambient conditions** | |
| Shock/vibration load | 30 g, 11 ms / 10 … 55 Hz, 1.0 mm |
| Ambient temperature during operation | 0 … +40 °C |
| Protection type | IP 67 |
| **Electrical connection** | |
| Connection | Pigtail, 0.3 m (+ Connector M12), 4-pin |
| **Accessories** | |
| Connection cable | VK … |

| More information / accessories | https://www.di-soric.com/208175 |
|---|---|


© di-soric . Right to change reserved