208174
BEK-A100-G1T-K-BS
Barlight

- Extremely high illuminance due to the most modern high-power LEDs
- Integrated power control with high efficiency
- Intelligent temperature control with switch-off automatic
- Homogeneous light field thanks to special LED optics
- High protection type
- Separate inputs for trigger signal and trigger polarity
- Robust metal housing
- Universal mounting options
- Scratch-resistant safety screen
- Crossbars and attachment optics available as an option

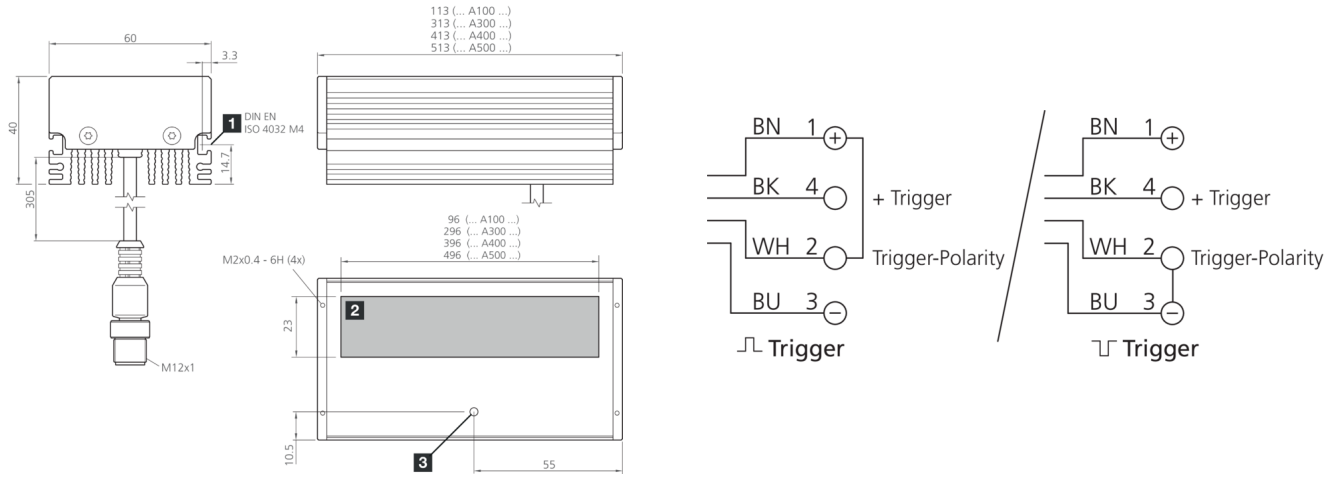

1) Mounting groove for nut
2) Illuminated area
3) LED OPERATION

BK: black BN: brown BU: blue WH: white

Function

Technical data (typ.)	+20°C, 24 V DC
Electrical features	
Service voltage	18 … 30 V DC (Supply Class 2)
Internal power consumption	535 mA (24 V DC)
Power	12.0 W (24 V DC)
Inverse polarity protection	Yes
Mechanical features	
Illuminated area	96 x 23 mm
Housing dimensions	40 x 60 x 113 mm
Housing length	113 mm
Housing height	40 mm
Housing width	60 mm
Housing material	Aluminum (Black, Anodized)
Material	PMMA, hardcoated (Safety screen)
Weight	470 g
Certifications, approvals	
Protection class	III, operation on protective low voltage
Risk group (DIN EN 62471)	Free group
Approvals	UL

© di-soric . Right to change reserved

208174
BEK-A100-G1T-K-BS
Barlight

Technical data (typ.)	+20°C, 24 V DC
General features	
Design	Barlight
Output, input, interface	
Trigger input high level	3.3 … 30.0 V
Trigger input low level	< 2.8 V
Optical data	
Light source	LED
Color	Red
Wavelength	625 nm
Deflection angle FWHM	30°
Light intensity	■ 90.0 kLx (100.0 mm) ■ 42.0 kLx (200.0 mm) ■ 9.50 kLx (500.0 mm)
Display, operation	
Control	Integrated power control
Display	LED green - Operating display
Ambient conditions	
Shock/vibration load	30 g, 11 ms / 10 … 55 Hz, 1.0 mm
Ambient temperature during operation	0 … +40 °C
Protection type	IP 67
Electrical connection	
Connection	Pigtail, 0.3 m (+ Connector M12), 4-pin
Accessories	
Connection cable	VK …

More information / accessories	https://www.di-soric.com/208174

© di-soric . Right to change reserved