208005
DCC 08 M 02 PSK-TSL/29
Inductive proximity sensor

- Metal connector
- Integrated amplifier
- Short-circuit protection
- Starting pulse suppression
- LED

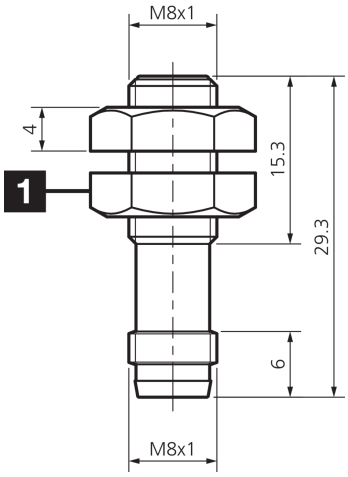

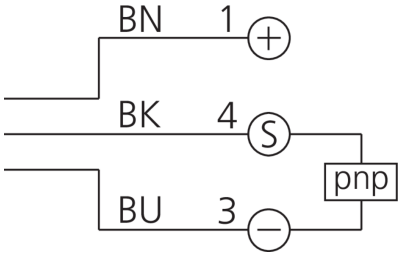

1) Width over flats 13 mm

BK: black BN: brown BU: blue

Function

Technical data (typ.)	+20°C, 24 V DC
Electrical features	
Service voltage	10 … 30 V DC
Internal power consumption	< 10 mA
Insulation voltage endurance	500 V
Mechanical features	
Installation type	Flush
Thread	M8 x 1
Housing length	30 mm
Housing material	Stainless steel
Certifications, approvals	
Protection class	III, operation on protective low voltage
General features	
Operating principle	inductive
Evaluation	digital
Design	Thread
Characteristics	increased operating distance
Product series	INE Industrial

© di-soric . Right to change reserved

208005
DCC 08 M 02 PSK-TSL/29
Inductive proximity sensor

Technical data (typ.)	+20°C, 24 V DC
Functional scope	
Scope of delivery	Sensor, 2 x M8 nuts
Output, input, interface	
Switching output	pnp, 200 mA, NO
Voltage drop (max.)	2.4 V
Detection range, measuring range, tolerance limits	
Switching distance (SN)	2 mm
Standardized measuring plate	8 x 8 x 1 mm
Switching hysteresis (max.)	< 15 %
Time behavior	
Switching frequency	3000 Hz
Ambient conditions	
Ambient temperature during operation	-25 … +70 °C
Protection type	IP 67
Electrical connection	
Connection	Connector, M8, 3-pin, A-coded
Accessories	
Connection cable	TK …

More information / accessories	https://www.di-soric.com/208005

© di-soric . Right to change reserved