207944
OT 18 FK 400 P3-B4
Retroreflective diffuse sensor

- Universal mounting options
- Low installation depth
- Sensitivity is adjustable
- LED switching status display
- Plastic housing

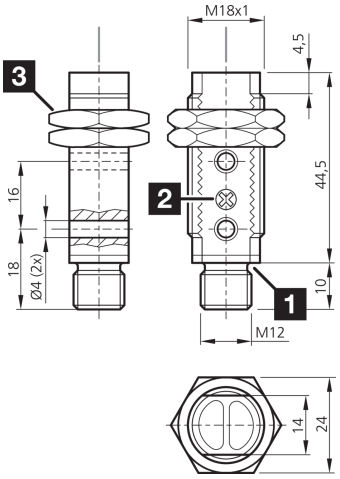

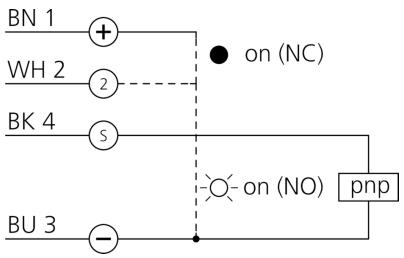

1) Potentiometer
2) LED
3) Width over flats 24 mm

BK: black BN: brown BU: blue WH: white

Function

Technical data (typ.)	+20°C, 24 V DC
Electrical features	
Service voltage	10 … 30 V DC
No-load current (max.)	30 mA
Mechanical features	
Thread	M18 x 1
Housing length	54.5 mm
Housing material	Plastic (ABS)
Material	PMMA (Window)
Certifications, approvals	
Protection class	III, operation on protective low voltage
General features	
Operating principle	Retroreflective diffuse sensor
Evaluation	digital
Design	Thread
Output, input, interface	
Switching output	pnp, 100 mA, NO/NC

© di-soric . Right to change reserved

207944
OT 18 FK 400 P3-B4
Retroreflective diffuse sensor

Technical data (typ.)	+20°C, 24 V DC
Optical data	
Light source	LED
Color	Infrared
Wavelength	880 nm
Modulation	Clocked
Ambient light immunity	3 kLx Clocked light, 10 kLx Sunlight
Detection range, measuring range, tolerance limits	
Range	400 mm
Standardized measuring plate	200 x 200 mm
Display, operation	
Sensitivity adjustment	Potentiometer
Time behavior	
Switching frequency	1000 Hz
Response time	0.50 ms
Release time	0.50 ms
Ambient conditions	
Ambient temperature during operation	-25 … +55 °C
Protection type	IP 67
Electrical connection	
Connection	Connector, M12, 4-pin

More information / accessories	https://www.di-soric.com/207944

© di-soric . Right to change reserved