207935
OT 18 FMR 600 N3-B4
Retroreflective diffuse sensor

- Angled optics
- Universal mounting options
- Low installation depth
- Sensitivity is adjustable
- LED switching status display
- Metal casing

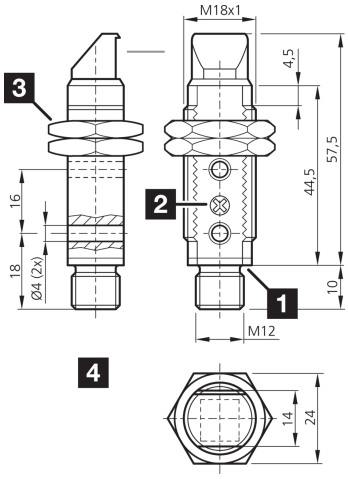

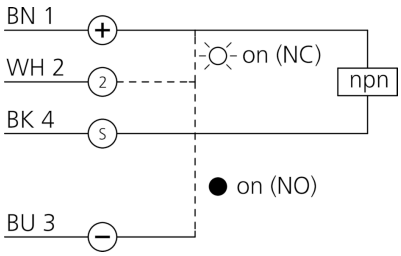

1) Potentiometer
2) LED
3) Width over flats 24 mm
4) Lateral light emission

BK: black BN: brown BU: blue WH: white

Function

Technical data (typ.)	+20°C, 24 V DC
Electrical features	
Service voltage	10 … 30 V DC
No-load current (max.)	30 mA
Mechanical features	
Thread	M18 x 1
Housing length	67.5 mm
Housing material	Metal
Material	PMMA (Window)
Certifications, approvals	
Protection class	III, operation on protective low voltage
General features	
Operating principle	Retroreflective diffuse sensor
Evaluation	digital
Design	Thread, Angled optics
Output, input, interface	
Switching output	npn, 100 mA, NO/NC

© di-soric . Right to change reserved

207935
OT 18 FMR 600 N3-B4
Retroreflective diffuse sensor

Technical data (typ.)	+20°C, 24 V DC
Optical data	
Light source	LED
Color	Infrared
Wavelength	880 nm
Modulation	Clocked
Ambient light immunity	3 kLx Clocked light, 10 kLx Sunlight
Detection range, measuring range, tolerance limits	
Range	600 mm
Standardized measuring plate	200 x 200 mm
Display, operation	
Sensitivity adjustment	Potentiometer
Time behavior	
Switching frequency	1000 Hz
Response time	0.50 ms
Release time	0.50 ms
Ambient conditions	
Ambient temperature during operation	-25 … +55 °C
Protection type	IP 67
Electrical connection	
Connection	Connector, M12, 4-pin

More information / accessories	https://www.di-soric.com/207935

© di-soric . Right to change reserved