207917
OES 18 FK 10000 N3-B4
Through-beam sensor, transmitter / receiver

- Universal mounting options
- Low installation depth
- Sensitivity is adjustable
- LED switching status display
- Plastic housing

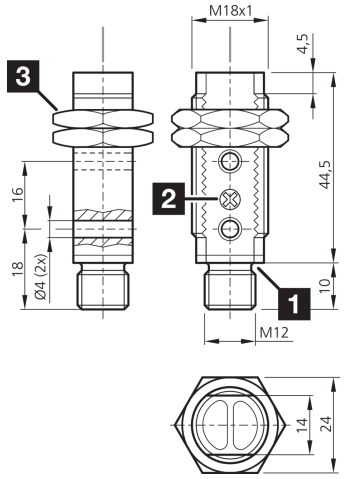

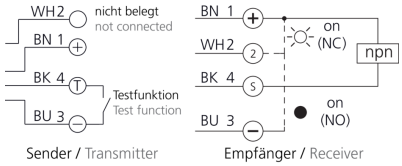

1) Potentiometer
2) LED
3) Width over flats 24 mm

BK: black BN: brown BU: blue WH: white

Function

Technical data (typ.)	+20°C, 24 V DC
Electrical features	
Service voltage	10 … 30 V DC
No-load current (max.)	30 mA
Mechanical features	
Thread	M18 x 1
Housing length	54.5 mm
Housing material	Plastic (ABS)
Material	PMMA (Window)
Certifications, approvals	
Protection class	III, operation on protective low voltage
General features	
Operating principle	Through-beam sensor
Evaluation	digital
Design	Thread
Consisting of	Transmitter and Receiver
Output, input, interface	
Switching output	npn, 100 mA, NO/NC

© di-soric . Right to change reserved

207917
OES 18 FK 10000 N3-B4
Through-beam sensor, transmitter / receiver

Technical data (typ.)	+20°C, 24 V DC
Optical data	
Light source	LED
Color	Infrared
Wavelength	880 nm
Modulation	Clocked
Ambient light immunity	3 kLx Clocked light, 10 kLx Sunlight
Detection range, measuring range, tolerance limits	
Range	0 … 10000 mm
Display, operation	
Sensitivity adjustment	Potentiometer
Time behavior	
Switching frequency	333 Hz
Response time	1.5 ms
Release time	1.5 ms
Ambient conditions	
Ambient temperature during operation	-25 … +55 °C
Protection type	IP 67
Electrical connection	
Connection	Connector, M12, 4-pin

More information / accessories	https://www.di-soric.com/207917

© di-soric . Right to change reserved