207441
BEK-D70-G2TI-K-BS
Dark field light

- To detect the finest changes in surface
- Constant level of light intensity over the entire voltage range
- Homogeneous illumination
- Protection class IP 67
- Low levels of heat produced
- External trigger input
- High efficiency
- Light intensity can be adjusted
- Sturdy housing design

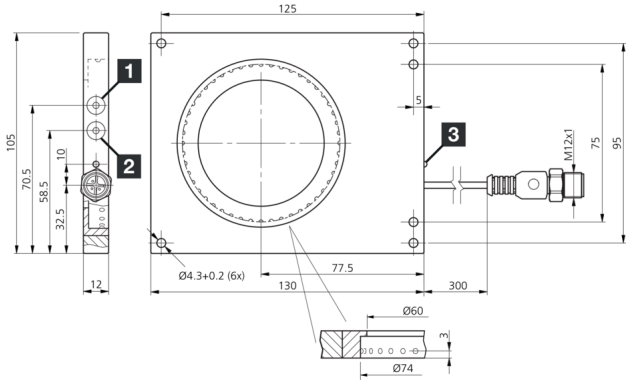

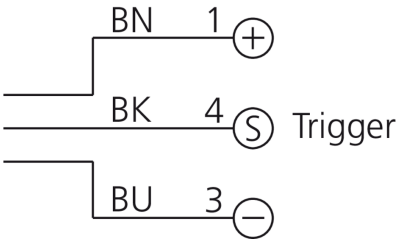

1) brightness
2) Trigger
3) LED OPERATION

BK: black BN: brown BU: blue

Function

Technical data (typ.)	+20°C, 24 V DC
Electrical features	
Service voltage	10 … 35 V DC (Supply Class 2)
No-load current (max.)	220 mA (24 V DC)
Power	5.5 W (24 V DC)
Inverse polarity protection	Yes
Insulation voltage endurance	500 V
Mechanical features	
Illuminated area	Ø 70
Housing dimensions	105 x 130 x 12 mm
Diameter	Ø 70 mm (Diameter)
Housing material	Aluminum (Black, Anodized)
Certifications, approvals	
Protection class	III, operation on protective low voltage
Risk group (DIN EN 62471)	Free group
Approvals	UL
General features	
Design	Dark field light
Characteristics	Trigger input

207441
BEK-D70-G2TI-K-BS
Dark field light

Technical data (typ.)	+20°C, 24 V DC
Output, input, interface	
Trigger input high level	3.3 … 35.0 V
Trigger input low level	< 2.8 V
Optical data	
Light source	LED
Color	Green
Wavelength	525 nm
Deflection angle FWHM	40°
Display, operation	
Control	Integrated power control
Display	LED green - Operating display
Time behavior	
On-delay time (Trig.)	0.400 ms
Switch off delay (Trig.)	0.120 ms
Ambient conditions	
Shock/vibration load	30 g, 11 ms / 10 … 55 Hz, 1.0 mm
Ambient temperature during operation	0 … +40 °C (Continuous operation)
Protection type	IP 67
Electrical connection	
Connection	Pigtail, 0.3 m, M12, 3-pin
Accessories	
Connection cable	VK …

More information / accessories	https://www.di-soric.com/207441

© di-soric . Right to change reserved