# 207439
# BEK-D70-G0TI-K-BS
# Dark field light

- To detect the finest changes in surface
- Constant level of light intensity over the entire voltage range
- Homogeneous illumination
- Protection class IP 67
- Low levels of heat produced
- External trigger input
- High efficiency
- Light intensity can be adjusted
- Sturdy housing design

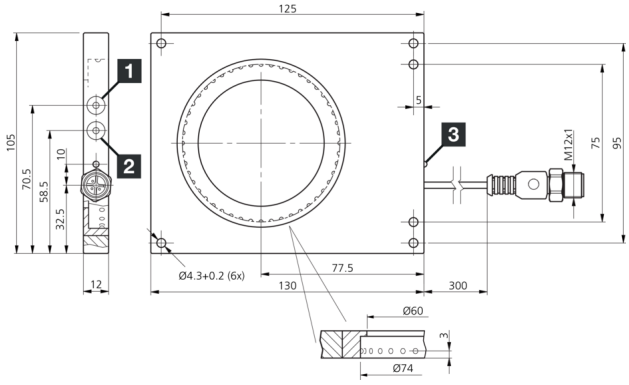


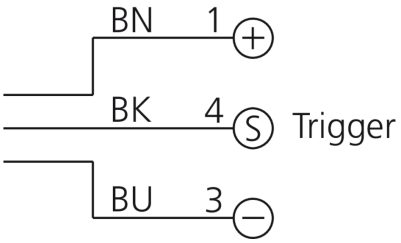


1) brightness
2) Trigger
3) LED OPERATION

BK: black BN: brown BU: blue

**Function**

| Technical data (typ.) | +20°C, 24 V DC |
|---|---|
| **Electrical features** | |
| Service voltage | 10 … 35 V DC (Supply Class 2) |
| No-load current (max.) | 120 mA (24 V DC) |
| Power | 3.0 W (24 V DC) |
| Inverse polarity protection | Yes |
| Insulation voltage endurance | 500 V |
| **Mechanical features** | |
| Illuminated area | Ø 70 |
| Housing dimensions | 105 x 130 x 12 mm |
| Diameter | Ø 70 mm (Diameter) |
| Housing material | Aluminum (Black, Anodized) |
| **Certifications, approvals** | |
| Protection class | III, operation on protective low voltage |
| Risk group (DIN EN 62471) | Free group |
| Approvals | UL |
| **General features** | |
| Design | Dark field light |
| Characteristics | Trigger input |

# 207439
# BEK-D70-G0TI-K-BS
# Dark field light

| Technical data (typ.) | +20°C, 24 V DC |
|---|---|
| **Output, input, interface** | |
| Trigger input high level | 3.3 … 35.0 V |
| Trigger input low level | < 2.8 V |
| **Optical data** | |
| Light source | LED |
| Color | Infrared |
| Wavelength | 870 nm |
| Deflection angle FWHM | 30° |
| **Display, operation** | |
| Control | Integrated power control |
| Display | LED green - Operating display |
| **Time behavior** | |
| On-delay time (Trig.) | 0.300 ms |
| Switch off delay (Trig.) | 0.110 ms |
| **Ambient conditions** | |
| Shock/vibration load | 30 g, 11 ms / 10 … 55 Hz, 1.0 mm |
| Ambient temperature during operation | 0 … +40 °C (Continuous operation) |
| Protection type | IP 67 |
| **Electrical connection** | |
| Connection | Pigtail, 0.3 m, M12, 3-pin |
| **Accessories** | |
| Connection cable | VK … |

| More information / accessories | https://www.di-soric.com/207439 |
|---|---|


© di-soric . Right to change reserved