207145
BE-R70-F1-K-CLR
Ringlight

- High excess current factor
- Pulsed mode for inspection of fast moving objects
- Extremely powerful light for high depth of field
- Long life thanks to intelligent thermal management
- Homogeneous luminous field
- High protection type IP 67
- Robust metal housing

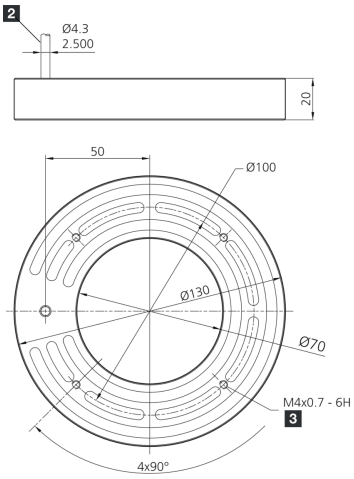

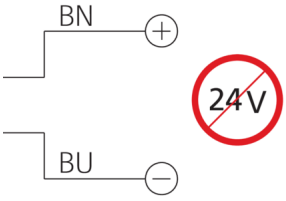

Betrieb ausschließlich mit Flash-Controller an einem *Supply Class 2* - Netzteil!

Use only with flash equipment driven by a power supply *Class 2*!

A utiliser exclusivement avec un contrôleur d'impulsion connecté a une alimentation *Class 2*!

1) 6 mm deep

2) Connection cable

Function

Technical data (typ.)	+20°C, 24 V DC
Electrical features	
Power consumption (in pulse / max.)	96.0 W
Energization factor (in pulse / max.)	8
Energization (in pulse / max.)	6000 mA
Service voltage	No constant voltage!
Inverse polarity protection	Yes
Insulation voltage endurance	500 V
Mechanical features	
Diameter	Ø 70 / Ø 130 mm (Diameter)
Height	20 mm
Housing material	Aluminum (Black, Anodized)
Material	■ Polyurethane (Cable) ■ PMMA, clear (Protection optics)
Certifications, approvals	
Risk group (DIN EN 62471)	Free group
Approvals	UL
General features	
Design	Ringlight

207145
BE-R70-F1-K-CLR
Ringlight

Technical data (typ.)	+20°C, 24 V DC
Optical data	
Light source	LED
Color	Red (clear)
Wavelength	633 nm
Deflection angle FWHM	30°
Light intensity	■ 7.20 kLx (200.0 mm / 100 %) ■ 28.8 kLx (200.0 mm / 400 %) ■ 55.0 kLx (200.0 mm / 800 %) ■ 2.60 kLx (500.0 mm / 100 %) ■ 10.0 kLx (500.0 mm / 400 %) ■ 20.0 kLx (500.0 mm / 800 %)
Display, operation	
Control	Flashable by means of flash controller
Ambient conditions	
Shock/vibration load	30 g, 11 ms / 10 … 55 Hz, 1.0 mm
Ambient temperature during operation	0 … +40 °C
Protection type	IP 67
Electrical connection	
Connection	Cable, 2.5 m (flying leads, Use only with flash controller!)

More information / accessories	https://www.di-soric.com/207145

© di-soric . Right to change reserved