207037
DCCQ 08 M 03 POK-TSL
Inductive proximity sensor

- Metal connector
- Integrated amplifier
- Short-circuit protection
- Starting pulse suppression
- LED

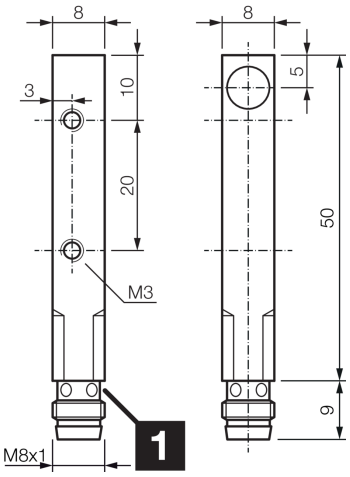

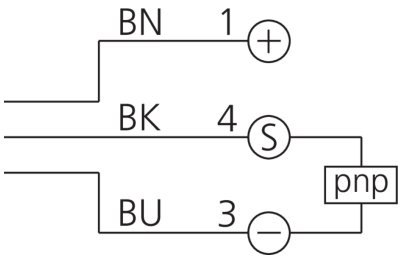

1) LED 4 x 90° (yellow)

BK: black BN: brown BU: blue

Function

Technical data (typ.)	+20°C, 24 V DC
Electrical features	
Service voltage	10 … 30 V DC
Internal power consumption	< 10 mA
Insulation voltage endurance	500 V
Mechanical features	
Installation type	quasi-flush
Housing dimensions	8 x 8 mm
Housing length	50 mm
Housing height	8 mm
Housing width	8 mm
Housing material	Brass (nickel-plated)
Certifications, approvals	
Protection class	III, operation on protective low voltage
General features	
Operating principle	inductive
Evaluation	digital
Design	Cuboid design
Characteristics	extremely high operating distance

207037
DCCQ 08 M 03 POK-TSL
Inductive proximity sensor

Technical data (typ.)	+20°C, 24 V DC
Product series	INQ Cubic Model
Output, input, interface	
Switching output	pnp, 200 mA, NC
Voltage drop (max.)	2.4 V
Detection range, measuring range, tolerance limits	
Switching distance (SN)	3 mm
Standardized measuring plate	9 x 9 x 1 mm
Switching hysteresis (max.)	< 15 %
Time behavior	
Switching frequency	1000 Hz
Ambient conditions	
Ambient temperature during operation	-25 … +70 °C
Protection type	IP 67
Electrical connection	
Connection	Connector, M8, 3-pin, A-coded
Accessories	
Connection cable	TK …

More information / accessories	https://www.di-soric.com/207037

© di-soric . Right to change reserved