206697
DCC 18 M 08B PSK-IBSL
Inductive proximity sensor

- Metal connector
- Integrated amplifier
- Short-circuit protection
- Starting pulse suppression
- LED

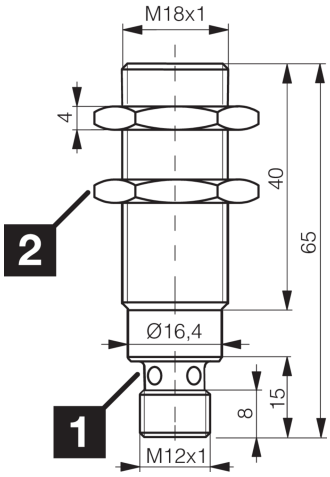

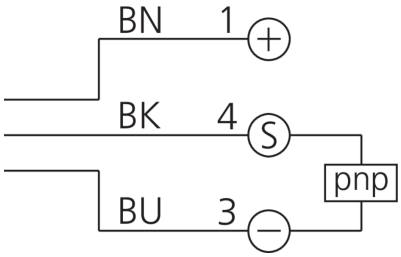

1) LED 4 x 90° (yellow) 2) Width over flats 24 mm BK: black BN: brown BU: blue

Function

Technical data (typ.)	+20°C, 24 V DC
Electrical features	
Service voltage	10 … 30 V DC
Internal power consumption	< 10 mA
Insulation voltage endurance	500 V
Mechanical features	
Installation type	quasi-flush
Thread	M18 x 1
Housing length	65 mm
Housing material	Brass (nickel-plated)
Certifications, approvals	
Protection class	III, operation on protective low voltage
General features	
Operating principle	inductive
Evaluation	digital
Design	Thread
Characteristics	increased operating distance
Product series	INE Industrial

© di-soric . Right to change reserved

206697
DCC 18 M 08B PSK-IBSL
Inductive proximity sensor

Technical data (typ.)	+20°C, 24 V DC
Functional scope	
Scope of delivery	Sensor, 2 x M18 nuts
Output, input, interface	
Switching output	pnp, 200 mA, NO
Voltage drop (max.)	2.4 V
Detection range, measuring range, tolerance limits	
Switching distance (SN)	8 mm
Standardized measuring plate	24 x 24 x 1 mm
Switching hysteresis (max.)	< 15 %
Time behavior	
Switching frequency	500 Hz
Ambient conditions	
Ambient temperature during operation	-25 … +70 °C
Protection type	IP 67
Electrical connection	
Connection	Connector, M12, 4-pin, A-coded
Accessories	
Connection cable	VK …

More information / accessories	https://www.di-soric.com/206697

© di-soric . Right to change reserved