206384
BEK-R70/30-G1TI-IBS-DIF
Ringlight

- Constant level of light intensity over the entire voltage range
- Internal control of power output
- Homogeneous illumination
- High protection type IP 67
- External trigger input
- High efficiency
- Light intensity can be adjusted
- Low levels of heat produced
- Sturdy housing design
- Metal casing

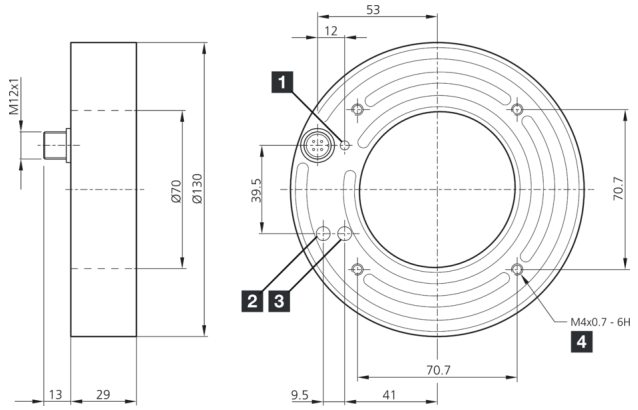

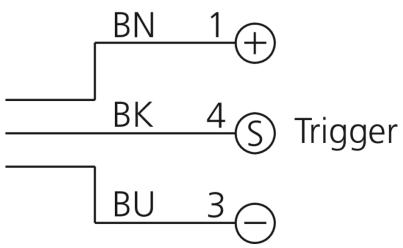

1) LED OPERATION
2) brightness
3) Trigger
4) 8 mm deep

BK: black BN: brown BU: blue

Function

Technical data (typ.)	+20°C, 24 V DC
Electrical features	
Service voltage	18 … 35 V DC (Supply Class 2)
No-load current (max.)	470 mA (24 V DC)
Power	11.5 W (24 V DC)
Inverse polarity protection	Yes
Insulation voltage endurance	500 V
Mechanical features	
Diameter	Ø 70 / Ø 130 mm (Diameter)
Housing material	Aluminum (Anodized)
Material	PMMA, diffuse (Protection optics)
Certifications, approvals	
Protection class	III, operation on protective low voltage
Risk group (DIN EN 62471)	Free group
Approvals	UL
General features	
Design	Ringlight
Output, input, interface	
Trigger input high level	3.3 … 35.0 V
Trigger input low level	< 2.8 V

206384
BEK-R70/30-G1TI-IBS-DIF
Ringlight

Technical data (typ.)	+20°C, 24 V DC
Optical data	
Light source	LED
Color	Red (diffuse)
Wavelength	633 nm
Deflection angle FWHM	30°
Light intensity	■ 5.10 kLx (100.0 mm) ■ 2.50 kLx (200.0 mm) ■ 0.600 kLx (500.0 mm)
Display, operation	
Control	Integrated power control
Display	LED green - Operating display
Ambient conditions	
Shock/vibration load	30 g, 11 ms / 10 … 55 Hz, 1.0 mm
Ambient temperature during operation	0 … +40 °C
Protection type	IP 67
Electrical connection	
Connection	Connector, M12, 3-pin
Accessories	
Connection cable	VK …

More information / accessories	https://www.di-soric.com/206384

© di-soric . Right to change reserved