# 206373
# LA 56-12.5-688-860 I-D
# Light grids

- Horizontal beam evaluation
- Integrated evaluation electronics
- Switching output
- Fault alarm output
- Compact design
- Aluminum housing
- Easy to install

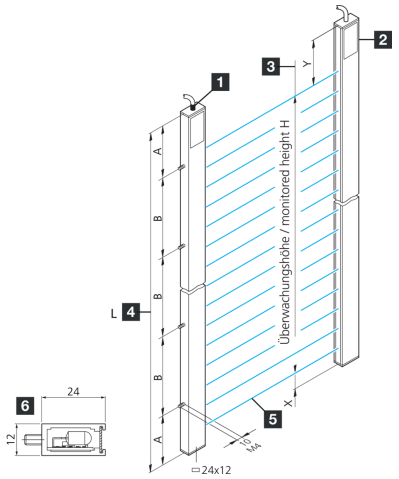


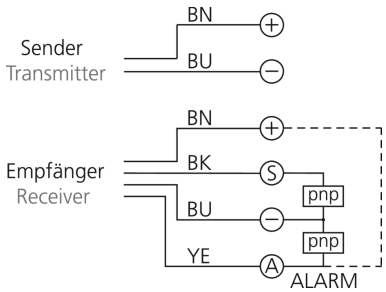


1) Transmitter
2) Receiver
3) Monitoring height H
4) Profile length L
5) Synchronous beam
6) Profile cross section

BK: black BN: brown BU: blue YE: yellow

## Function

| Technical data (typ.) | +20°C, 24 V DC |
|---|---|
| **Electrical features** | |
| Service voltage | 20.4 … 28.8 V DC |
| Power consumption | 8 W |
| **Mechanical features** | |
| Assembly | Threaded bolt (2) |
| Profile cross section | 12 x 24 mm |
| Housing height | 24 mm |
| Housing width | 12 mm |
| Dimension | ■ A: 80 mm<br>■ B: 700 mm<br>■ X: 13.5 mm<br>■ Y: 153.5 mm |
| Profile length | 860 mm |
| Housing material | Aluminum (silver, Anodized) |
| **Certifications, approvals** | |
| Protection class | III, operation on protective low voltage |
| EMC directives | EN 61000-6-3:2001 / EN 61000-6-1:2001 |

# 206373
# LA 56-12.5-688-860 I-D
# Light grids

| Technical data (typ.) | +20°C, 24 V DC |
|---|---|
| **General features** | |
| Evaluation | horizontal |
| Evaluation electronics | integrated |
| **Output, input, interface** | |
| Output function | Dark switching |
| Switching output | pnp, 200 mA, NO, short-circuit-proof |
| **Optical data** | |
| Light source | LED |
| Color | Infrared |
| Wavelength | 880 nm |
| Beam evaluation | via integrated evaluation electronics |
| **Detection range, measuring range, tolerance limits** | |
| Beam separation | 12.5 mm |
| Number of beams | 56 |
| Monitoring height | 688 mm |
| Range | 700 … 4000 mm (factory setting) |
| **Display, operation** | |
| Display | LED (Service voltage / output stage, error (alarm)) |
| **Time behavior** | |
| Cycle time per light beam | 1 ms |
| Total cycle time | Anzahl Lichtstrahlen x 1 ms + 4 ms |
| Basic processing time | 4 ms |
| **Ambient conditions** | |
| Ambient temperature during operation | -10 … +45 °C |
| Protection type | IP 54 (IP 65 optional) |
| **Electrical connection** | |
| Connection | Cable, 4.0 m (with ferrule) |

| More information / accessories | https://www.di-soric.com/206373 |
|---|---|


© di-soric . Right to change reserved