206201
LI 32-25-775-840 I
Light grids

- With evaluation electronics LVE ... / LVX ... measuring and switching
- With evaluation electronics LVB ... switching
- Beam evaluation horizontal or diagonal
- Compact design
- Aluminum housing
- Easy to install

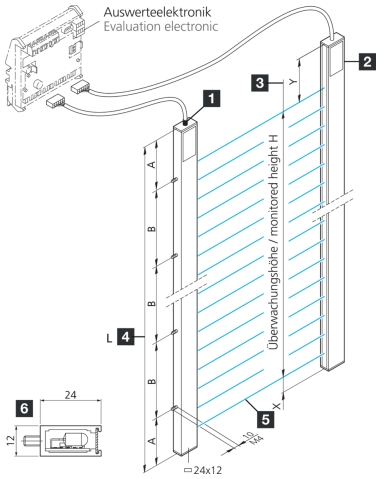

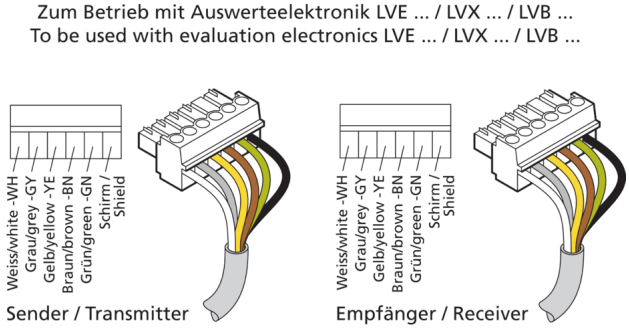

1) Transmitter
2) Receiver
3) Monitoring height H
4) Profile length L
5) Evaluation electronics
6) Profile cross section

BN: brown
GN: green
GY: grey
WH: white
YE: yellow

Function

Technical data (typ.)	+20°C, 24 V DC
Electrical features	
Service voltage	20 … 26 V DC (see evaluation electronics)
Mechanical features	
Assembly	Threaded bolt (2)
Profile cross section	12 x 24 mm
Housing height	24 mm
Housing width	12 mm
Dimension	■ A: 70 mm ■ B: 700 mm ■ X: 20 mm ■ Y: 45 mm
Profile length	840 mm
Housing material	Aluminum (natural)
Certifications, approvals	
Protection class	III, operation on protective low voltage

© di-soric . Right to change reserved

206201
LI 32-25-775-840 I
Light grids

Technical data (typ.)	+20°C, 24 V DC
General features	
Evaluation	absolute, percentage, Configurable via evaluation electronics
Evaluation electronics	external
Output, input, interface	
Output function	Configurable via evaluation electronics
Switching output	Configurable via evaluation electronics, NO, NC
Optical data	
Light source	LED
Color	Infrared
Wavelength	880 nm
Beam evaluation	via external evaluation electronics
Detection range, measuring range, tolerance limits	
Beam separation	25 mm
Number of beams	32
Monitoring height	775 mm
Range	250 … 6000 mm (adjustable via evaluation electronics)
Measuring range	775 mm
Ambient conditions	
Ambient temperature during operation	-20 … +40 °C
Protection type	IP 54 (IP 65 optional)
Electrical connection	
Connection	Cable, 4.0 m (with plug connector, additional variants on request)

More information / accessories	https://www.di-soric.com/206201

© di-soric . Right to change reserved