204595
KFS 18 T 200 PSOLK-KL
Capacitive fill level sensor

- Level monitoring for conductive, non-conductive and viscous media
- Teflon probe rod
- High temperature range
- High protection type

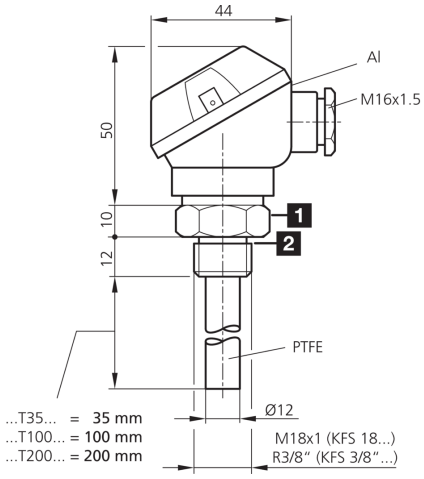

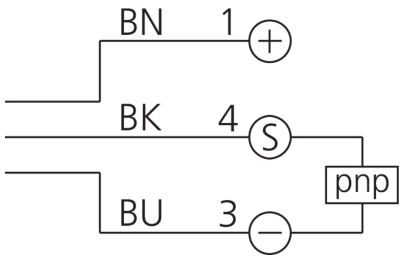

1) Width over flats 27 mm 2) O-ring, not included in delivery BK: black BN: brown BU: blue

Function

Technical data (typ.)	+20°C, 24 V DC
Electrical features	
Current-carrying capacity	100 mA
Service voltage	10 … 35 V DC
No-load current (max.)	10 mA
Insulation voltage endurance	500 V
Mechanical features	
Probe length	200 mm
Thread	M18 x 1
Housing material	Stainless steel (V4A , 1.4404 / AISI 316L, medium-touching)
Material	PTFE Teflon (Probe rod)
Certifications, approvals	
Protection class	III, operation on protective low voltage
Output, input, interface	
Switching output	pnp, 100 mA, NO/NC
Voltage drop (max.)	2 V
Detection range, measuring range, tolerance limits	
Switching hysteresis (max.)	material-dependent

© di-soric . Right to change reserved

204595
KFS 18 T 200 PSOLK-KL
Capacitive fill level sensor

Technical data (typ.)	+20°C, 24 V DC
Time behavior	
Switching frequency	< 5 Hz
Ambient conditions	
Ambient temperature during operation	-30 … +100 °C
Temperature resistance	+125 °C (Medium temperature)
Protection type	IP 67 (Clamping area) / IP 68 (Probe)
Pressure resistant	10 bar
Electrical connection	
Connection	Clamps

More information / accessories	https://www.di-soric.com/204595

© di-soric . Right to change reserved