204179
OEPQ 12 M 50000 G2-TSSL
High performance light barrier, receiver

- Long range
- Integrated amplifier electronics
- Transistor output with push-pull
- High function reserve
- Extremely dirt-resistant
- Easy adjustment
- Different designs to be combined
- High protection type
- Compact design

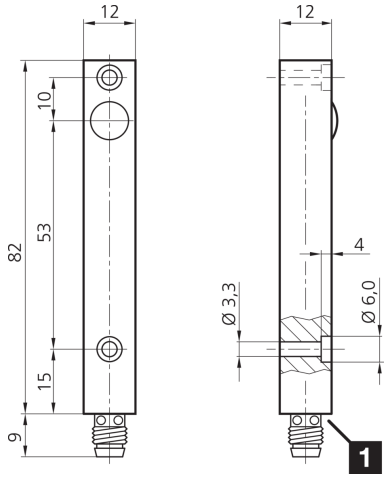

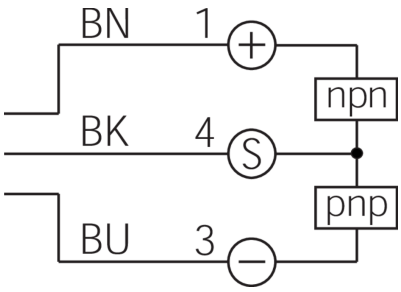

1) LED

BK: black BN: brown BU: blue

Function

Technical data (typ.)	+20°C, 24 V DC
Electrical features	
Service voltage	10 … 35 V DC
No-load current (max.)	40 mA
Mechanical features	
Housing dimensions	82 x 12 x 12 mm
Housing length	82 mm
Housing height	12 mm
Housing width	12 mm
Housing material	Aluminum (Anodized)
Certifications, approvals	
Protection class	III, operation on protective low voltage
General features	
Operating principle	Through-beam sensor, receiver
Evaluation	digital
Design	Cuboid design
Characteristics	High transmit power and dirt penetration
Consisting of	Receiver

© di-soric . Right to change reserved

204179
OEPQ 12 M 50000 G2-TSSL
High performance light barrier, receiver

Technical data (typ.)	+20°C, 24 V DC
Output, input, interface	
Switching output	Push-pull, 200 mA, NO
Optical data	
Ambient light immunity	15 kLx Sunlight, 2 kLx Clocked light
Detection range, measuring range, tolerance limits	
Range	0 … 50000 mm (dependent on the transmitter)
Display, operation	
Sensitivity adjustment	no setting elements
Time behavior	
Switching frequency	20 Hz
Ambient conditions	
Shock/vibration load	30 g, 11 ms / 10 … 55 Hz, 2.0 mm
Ambient temperature during operation	-20 … +60 °C
Protection type	IP 67
Electrical connection	
Connection	Connector, M8, 3-pin

More information / accessories	https://www.di-soric.com/204179

© di-soric . Right to change reserved