204171
OEPQ 12 M 20000 G2L-5M
High performance light barrier, receiver

- Range up to 20 m
- Integrated amplifier electronics
- Transistor output with push-pull
- High function reserve
- Extremely dirt-resistant
- Easy adjustment
- Different designs to be combined
- High protection type
- Compact design

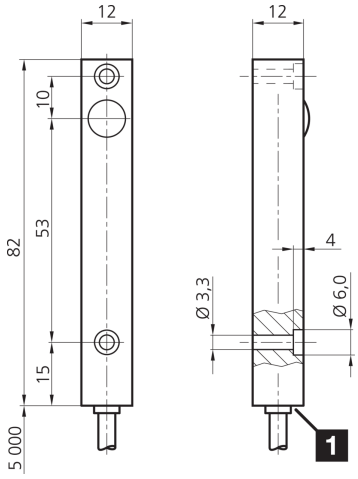

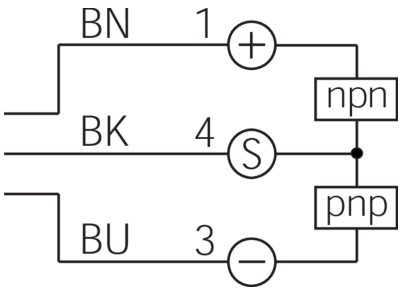

1) LED

BK: black BN: brown BU: blue

Function

Technical data (typ.)	+20°C, 24 V DC
Electrical features	
Service voltage	10 … 35 V DC
No-load current (max.)	40 mA
Mechanical features	
Housing dimensions	82 x 12 x 12 mm
Housing length	82 mm
Housing height	12 mm
Housing width	12 mm
Housing material	Aluminum (Anodized)
Material of cable	PVC
Certifications, approvals	
Protection class	III, operation on protective low voltage
General features	
Operating principle	Through-beam sensor, receiver
Evaluation	digital
Design	Cuboid design
Characteristics	High transmit power and dirt penetration
Consisting of	Receiver

204171
OEPQ 12 M 20000 G2L-5M
High performance light barrier, receiver

Technical data (typ.)	+20°C, 24 V DC
Output, input, interface	
Switching output	Push-pull, 200 mA, NO
Optical data	
Ambient light immunity	15 kLx Sunlight, 2 kLx Clocked light
Detection range, measuring range, tolerance limits	
Range	0 … 20000 mm (dependent on the transmitter)
Display, operation	
Sensitivity adjustment	no setting elements
Time behavior	
Switching frequency	150 Hz
Ambient conditions	
Shock/vibration load	30 g, 11 ms / 10 … 55 Hz, 2.0 mm
Ambient temperature during operation	-20 … +60 °C
Protection type	IP 67
Electrical connection	
Connection	Cable, 5.0 m

More information / accessories	https://www.di-soric.com/204171

© di-soric . Right to change reserved