204154
OSPQ 12 MLFL-5M
High performance light barrier, transmitter

- Range up to 20 m
- Transmit power with external resistance adjustable
- High function reserve
- Extremely dirt-resistant
- Easy adjustment
- Different designs to be combined
- High protection type
- Compact design

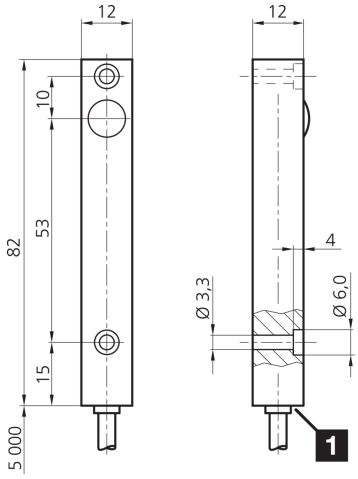

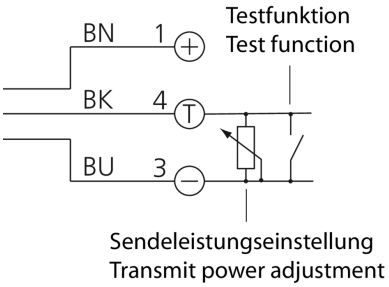

1) LED

BK: black BN: brown BU: blue

Function

Technical data (typ.)	+20°C, 24 V DC
Electrical features	
Service voltage	10 … 35 V DC
No-load current (max.)	55 mA
Mechanical features	
Housing dimensions	82 x 12 x 12 mm
Housing length	82 mm
Housing height	12 mm
Housing width	12 mm
Housing material	Aluminum (Anodized)
Material of cable	PVC
Certifications, approvals	
Protection class	III, operation on protective low voltage
General features	
Operating principle	Through-beam sensor, transmitter
Evaluation	digital
Design	Cuboid design
Characteristics	High transmit power and dirt penetration
Consisting of	Transmitter

© di-soric . Right to change reserved

204154
OSPQ 12 MLFL-5M
High performance light barrier, transmitter

Technical data (typ.)	+20°C, 24 V DC
Optical data	
Light source	LED
Color	Infrared
Wavelength	870 nm
Modulation	Clocked
Deflection angle FWHM	15°
Detection range, measuring range, tolerance limits	
Range	0 … 20000 mm (dependent on the receiver)
Display, operation	
Sensitivity adjustment	no setting elements
Ambient conditions	
Shock/vibration load	30 g, 11 ms / 10 … 55 Hz, 2.0 mm
Ambient temperature during operation	-20 … +60 °C
Protection type	IP 67
Electrical connection	
Connection	Cable, 5.0 m

More information / accessories	https://www.di-soric.com/204154

© di-soric . Right to change reserved