203937
KSSTI 600/80 FG3LK-AIBS
Capacitive label sensor

- Detection of transparent and paper labels
- Large slot depth for wide labels
- Sensitivity adjustment via teach key
- Auto-teach during a running process
- Remote teach option with key-lock function
- Temperature and air humidity compensation
- Static functional principle
- Separated housing

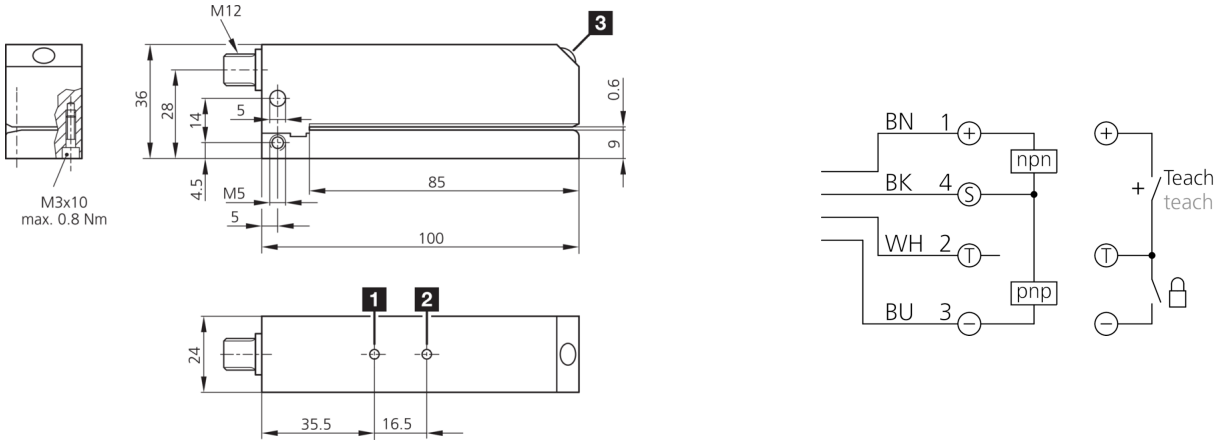

1) LED OPERATION
2) LED STATUS
3) TEACH key

BK: black BN: brown BU: blue WH: white

Function

Technical data (typ.)	+20°C, 24 V DC
Electrical features	
Service voltage	10 … 35 V DC
No-load current (max.)	70 mA
Insulation voltage endurance	500 V
Mechanical features	
Fork opening	0.6 mm
Leg length internal	85 mm
Housing dimensions	24 x 36 x 100 mm
Housing length	100 mm
Housing height	36 mm
Housing width	24 mm
Housing material	Aluminum (Black, Anodized)
Certifications, approvals	
Protection class	III, operation on protective low voltage
General features	
Operating principle	Capacitive
Design	Fork
Product series	KSSTI Capacitive

© di-soric . Right to change reserved . 15.01.2026 . Page 1 (2)

203937
KSSTI 600/80 FG3LK-AIBS
Capacitive label sensor

Technical data (typ.)	+20°C, 24 V DC
Output, input, interface	
Switching output	Push-pull, 200 mA, NO/NC, switchable
Voltage drop (max.)	2.5 V
Detection range, measuring range, tolerance limits	
Switching hysteresis (max.)	material-dependent
Label length	> 2 mm
Label interspace	> 2 mm
Label thickness	< 0.5 mm
Display, operation	
Sensitivity adjustment	Teach button, Remote teach
Ambient conditions	
Ambient temperature during operation	0 … +60 °C
Protection type	IP 65
Electrical connection	
Connection	Connector, M12, 4-pin
Accessories	
Connection cable	VK …

More information / accessories	https://www.di-soric.com/203937

© di-soric . Right to change reserved