# 203636
# DCCK 18 M 20 POK-IBSL
# Inductive proximity sensor

- Metal connector
- Integrated amplifier
- Short-circuit protection
- Starting pulse suppression
- LED

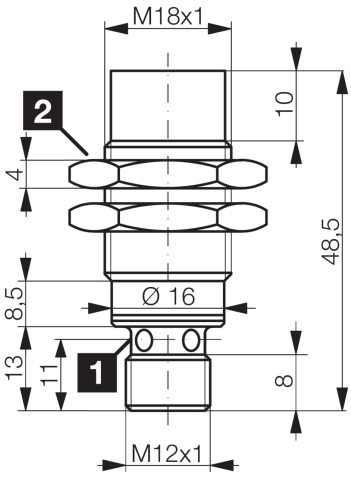


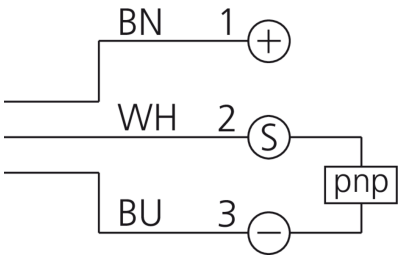


1) LED 4 x 90° (yellow) 2) Width over flats 24 mm BN: brown BU: blue WH: white

**Function**

| Technical data (typ.) | +20°C, 24 V DC |
|---|---|
| **Electrical features** | |
| Service voltage | 10 … 30 V DC |
| Internal power consumption | < 10 mA |
| Insulation voltage endurance | According to IEC 60947-5-2 (7.2.3.1) |
| **Mechanical features** | |
| Installation type | non-flush |
| Thread | M18 x 1 |
| Housing length | 48.5 mm |
| Housing material | Brass (chromium-plated) |
| **Certifications, approvals** | |
| Protection class | III, operation on protective low voltage |
| Approvals | UL |
| **General features** | |
| Operating principle | inductive |
| Evaluation | digital |
| Design | Thread |
| Characteristics | extremely high operating distance |
| Product series | INE Industrial |

# 203636
# DCCK 18 M 20 POK-IBSL
# Inductive proximity sensor

| Technical data (typ.) | +20°C, 24 V DC |
|---|---|
| **Functional scope** | |
| Scope of delivery | Sensor, 2 x M18 nuts |
| **Output, input, interface** | |
| Switching output | pnp, 200 mA, NC |
| Voltage drop (max.) | 2 V (200 mA) |
| **Detection range, measuring range, tolerance limits** | |
| Switching distance (SN) | 20 mm |
| Standardized measuring plate | 60 x 60 x 1 mm |
| Switching hysteresis (max.) | < 3 … 15 % |
| **Time behavior** | |
| Switching frequency | 500 Hz |
| **Ambient conditions** | |
| Ambient temperature during operation | -25 … +70 °C |
| Protection type | IP 67 |
| **Electrical connection** | |
| Connection | Connector, M12, 4-pin, A-coded |
| **Accessories** | |
| Connection cable | VK … |

| More information / accessories | https://www.di-soric.com/203636 |
|---|---|


© di-soric . Right to change reserved