201471
OLVTI 41 P3K-IBS
Glass fiber-optic amplifier

- Sensitivity adjustable via external teach input or via buttons
- Metal casing
- Red light
- High switching frequency
- Light/dark switching
- Metal connector
- High protection type

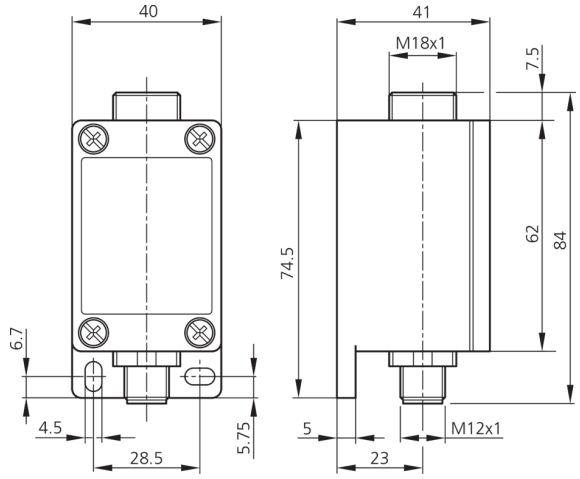

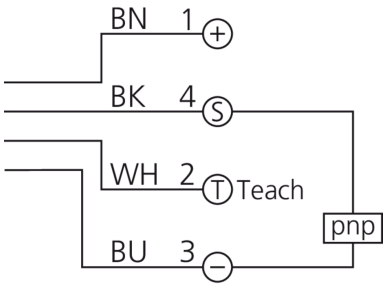

BK: black BN: brown BU: blue WH: white

Function

Technical data (typ.)	+20°C, 24 V DC
Electrical features	
Service voltage	10 … 35 V DC
No-load current (max.)	45 mA
Insulation voltage endurance	500 V
Mechanical features	
Housing length	74.5 mm
Housing height	42 mm
Housing width	40 mm
Housing material	Die-cast zinc (painted)
Certifications, approvals	
Protection class	III, operation on protective low voltage
General features	
Amplifier for	Glass fiber optics M18
Evaluation	digital
Design	Cuboid design
Output, input, interface	
Switching output	pnp, 200 mA, NO/NC, programmable
Voltage drop (max.)	2.8 V

201471
OLVTI 41 P3K-IBS
Glass fiber-optic amplifier

Technical data (typ.)	+20°C, 24 V DC
Optical data	
Light source	LED
Color	Red
Wavelength	660 nm
Modulation	Clocked
Ambient light immunity	50 kLx
Detection range, measuring range, tolerance limits	
Range	60 mm
Switching hysteresis (max.)	12 %
Reproducibility	< 2 %
Display, operation	
Operating elements	3 (Teach, Man-, Man+)
Sensitivity adjustment	Teach button, Remote teach
Display	LED green - Run, yellow - Output, Red - Teach / Error
Time behavior	
Switching frequency	1500 Hz
Ambient conditions	
Ambient temperature during operation	-10 … +60 °C
Temperature drift	0.3 %/K
Protection type	IP 65
Electrical connection	
Connection	Connector, M12, 4-pin

More information / accessories	https://www.di-soric.com/201471

© di-soric . Right to change reserved