CAPACITIVE LABEL SENSORS KGUTI

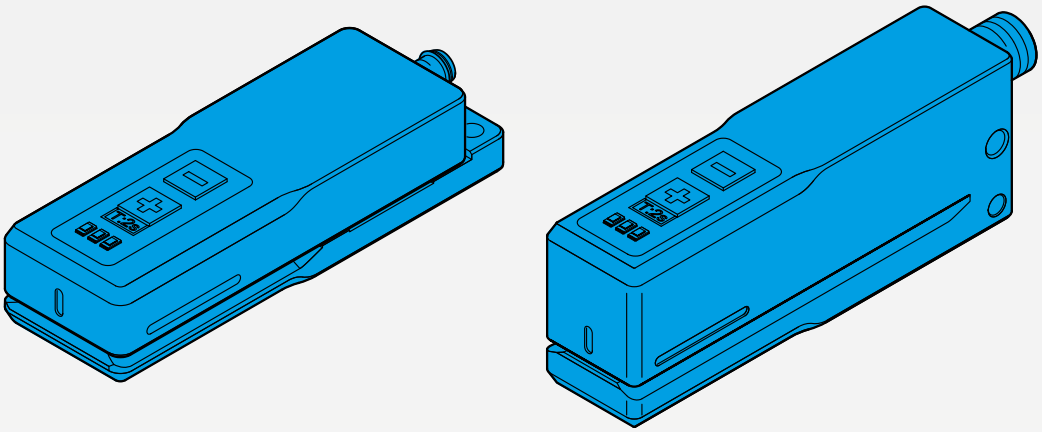

600018-0000EN · Rev 1 · 2023/12

OPERATING INSTRUCTIONS

di-soric

TABLE OF CONTENTS

1 PRELIMINARY NOTE 4

1.1 About the product ... 4
1.2 Symbols ... 4
1.3 Abbreviations, terms ... 4

2 SAFETY INSTRUCTIONS 4

3 INTENDED USE 4

4 PRODUCT DESCRIPTION 5

4.1 Properties ... 5
4.2 Variants ... 5

5 INSTALLATION 6

5.1 Installation conditions ... 6
5.2 Mounting ... 6
5.3 Alignment of sensor to the object ... 6

6 ELECTRICAL CONNECTION 7

6.1 General notes ... 7
6.2 Pin assignment ... 7
6.3 Switching logic of switching output ... 7
6.4 Connect supply voltage ... 8

7 OPERATING AND DISPLAY ELEMENTS 8

8 COMMISSIONING SENSOR 8

8.1 General notes ... 8
8.2 Parameterization on the sensor with operating elements ... 8
8.2.1 Autoteach to moving label tape ... 9
8.2.2 Static individual value teaching and label gap ... 9
8.2.3 Manual adjustment of the switching point ... 10
8.2.4 Adjust switching logic ... 10
8.2.5 Reset parameterization to factory setting ... 10
8.2.6 Calibration of sensor to reference value ... 11
8.3 Parameterization with multi-function input on pin 2 ... 11
8.3.1 Autoteach to moving label tape ... 11
8.3.2 Static individual value teaching and label gap ... 11
8.3.3. Adjust switching logic ... 12
9.3.4. Key lock ... 12

9 IO-LINK 13
9.1 Interface ... 13
9.2 IODD ... 13
9.3 Identification ... 14
9.4 Process data ... 14
9.5 Basic functions ... 15
9.6 Parameters and commands ... 16
9.6.1 Parameters for the sensor function ... 16
9.6.2 Elementary parameters for the switching output ... 16
9.6.3 Teaching commands for the switching output ... 19
9.6.4 Parameters for multifunction input and output to pin 2 ... 20
9.6.5 Calibration of sensor to reference value ... 20
9.6.6 Parameters of error types ... 21
9.7 Diagnostics ... 21
9.7.1 Standard ... 21
9.7.2 Device-specific diagnosis ... 22

10 TROUBLESHOOTING 22

11 MAINTENANCE, REPAIRS, DISPOSAL 23
11.1 Maintenance ... 23
11.2 Repair ... 23
11.3 Disposal ... 23

1 PRELIMINARY NOTE

1.1 ABOUT THE PRODUCT

IMPORTANT! Technical data, the instructions, data sheet and IODD can be found via the QR code on the packaging or alternately via the article number at www.di-soric.com.

1.2 SYMBOLS

Warning symbol about personal harm

Note on efficient and trouble-free operation

Important! Malfunctions or faults are possible if not observed

1.3 ABBREVIATIONS, TERMS

NC	Switching logic of normally closed contact
NO	Switching logic of normally open contact
PELV	Protective extra low voltage
SELV	Safety extra low voltage
NEC	National Electrical Code
UL	Underwriters Laboratories
SSC	IO-Link switching signal channel
SP1	IO-Link setpoint 1
TP1	IO-Link teachpoint 1
TP2	IO-Link teachpoint 2

2 SAFETY INSTRUCTIONS

WARNING! The device is not a safety component pursuant to 2006/42/EC and EN 61496-1/-2. The device may not be used for personal protection! Non-compliance can lead to death or serious injuries! The device may only be used for the intended purpose!

3 INTENDED USE

The KGUTI capacitive label sensor is a sensor for contactlessly detecting labels on a carrier tape.

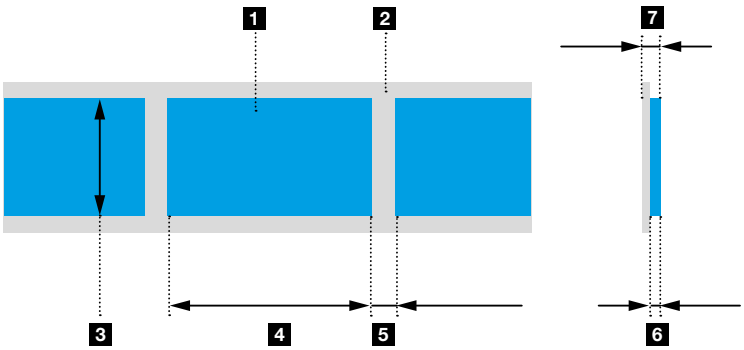

1 Label
2 Carrier tape
1 + 2 Label tape

3 Label width
4 Label length
5 Label gap
6 Label thickness
7 Label tape thickness

4 PRODUCT DESCRIPTION

4.1 PROPERTIES

KGUTI capacitive label sensors are devices for the detection of thin, transparent, film, and paper labels on carrier tapes. Capacitive label sensors detect labels even at high tape speeds.

NOTE:
Capacitive label sensors are suitable for thin labels. The permitted label tape thickness is 0.1 mm less than the fork width.

NOTE:
Labels containing metal can be detected only in limited fashion with capacitive label sensors.

4.2 VARIANTS

Capacitive label sensors from the KGUTI series are available in the KGUTI50 and KGUTI80 models.
Label sensors in the KGUTI50 model are flat and can be integrated in machines in a space-saving manner. Label sensors in the KGUTI80 model, with a fork depth of 85 mm, are suited for labels with a large label width.
Information on the permitted dimensions of the label tape, the labels and the label gap can be found on the data sheet of the sensor.

The following product variants are available:

KGUTI50 model

KGUTI80 model

Device	Housing	Leg length internal	Fork opening	Remote teach	Connection	Plug connection
KGUTI50-0.4-G3-T3	32 x 21.4 x 102 mm	50 mm	0.4 mm	no	Connector, M8, 3-pin	at the back
KGUTI50-0.4-G3-T4	32 x 21.4 x 102 mm	50 mm	0.4 mm	Yes	Connector, M8, 4-pin	at the back
KGUTI50-1-G3-T3	32 x 22 x 102 mm	50 mm	1 mm	no	Connector, M8, 3-pin	at the back
KGUTI50-1-G3-T4	32 x 22 x 102 mm	50 mm	1 mm	Yes	Connector, M8, 4-pin	at the back
KGUTI80-1-G3-B4	24 x 36 x 100 mm	85 mm	1 mm	Yes	Connector, M12, 4-pin	at the back
KGUTI80-1-G3-RB4	24 x 36 x 100 mm	85 mm	1 mm	Yes	Connector, M12, 4-pin	at the top

NOTE: Capacitive label sensors with a small fork width are suited for difficult materials.
The permitted label tape thickness is 0.1mm less than the fork width.

5 INSTALLATION

5.1 INSTALLATION CONDITIONS

IMPORTANT!
The permitted ambient conditions for operation of the device must be maintained.
The sensor must be protected from mechanical loads such as shocks and impacts.
The sensor may be mounted in any position, as long as mounting is performed free of vibration.

NOTE:
Do not exert pressure on the device from above, so as to avoid affecting the capacitive functional principle.

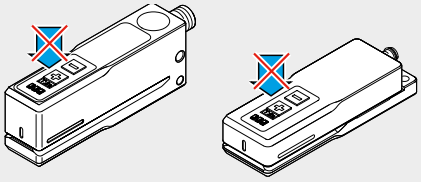

5.2 MOUNTING

Fasten the device at the mounting holes. Observe the maximum torque for the fastening screws (M3 max. 0.5 Nm, M4 max. 1.4 Nm, M5 max. 2.5 Nm).
Fasten the sensor with a lock washer in order to break open the surface of the sensor.

5.3 ALIGNMENT OF SENSOR TO THE OBJECT

Place the tensioned label tape in the fork opening while lightly touching the lower leg. Position labels in the detection area of the sensor.

NOTE:
Markings for the detection range are located on the side of the sensor.

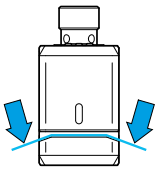

Position of label tape

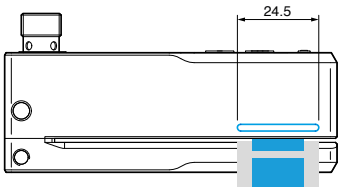

Position of label

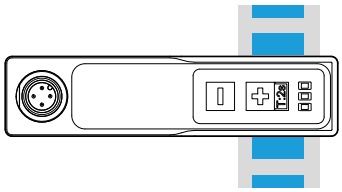

Position of label

6 ELECTRICAL CONNECTION

6.1 GENERAL NOTES

IMPORTANT! The device may only be installed by a qualified electrician. National and international regulation for setting up electrotechnical systems are to be adhered to.

6.2 PIN ASSIGNMENT

Depending on the product variant, the device has a plug with 3 or 4 pins with remote teaching function (*see 4.2 Variants, page 5*).

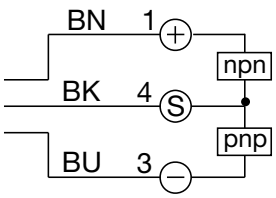

Pin assignment for product variants with plugs with 3 pins

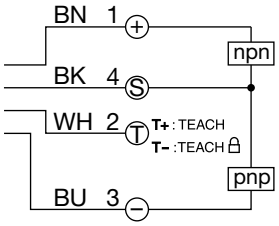

Pin assignment for product variants with plugs with 4 pins (factory setting remote teaching)

NOTE:
With IO-Link, the function of pin 2 can be configured from the factory setting in product variants with 4 pins.

6.3 SWITCHING LOGIC OF SWITCHING OUTPUT

In the factory setting, the device has a differential switching output at pin 4 with NO switching logic. After teaching the device with a label tape, the following switching behavior results in operation at a PNP input card:
Label in detection area – switching output is active
Label gap in detection area, switching output is not active

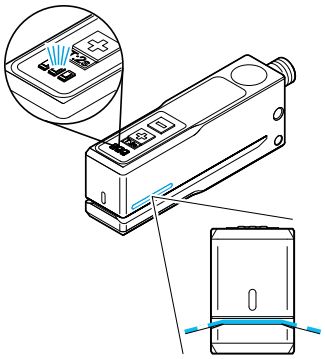

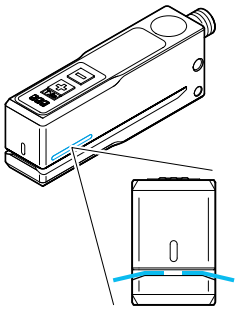

NOTE:
If the switching logic is set to NC, then an inverted switching behavior results.

6.4 CONNECT SUPPLY VOLTAGE

IMPORTANT!
Ensure a voltage supply to SELV, PELV. Only operate power supplies with supply class 2 in the case of UL applications.

- Disconnect the device from the power.
- Connect supply voltage to device in accordance with the technical data

7 OPERATING AND DISPLAY ELEMENTS

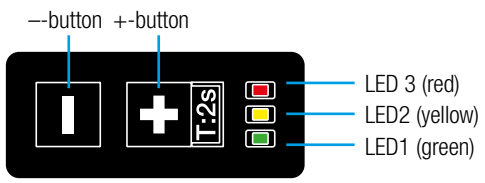

LED display in operation		
LED1	green on	Sensor ready
LED1	green flashing	IO-Link communication active
LED2	yellow on	Switching output 1 active
LED3	red on	Teaching not successful

Keyboard		
+	Press >2s	Teaching and configuration
+	Press briefly	Switching point is increased
–	Press briefly	Switching point is reduced
–	Press >6s	Calibration of reference value

8 COMMISSIONING SENSOR

8.1 GENERAL NOTES

By switching on the supply voltage, the device is put into operation. After the readiness delay has elapsed, the device is operational.
In the delivery state, the parameters are set to the factory setting. The device can also be adjusted via appropriate IO-Link configuration software.

8.2 PARAMETERIZATION ON THE SENSOR WITH OPERATING ELEMENTS

NOTE:
While the teaching process is active, no mechanical pressure can be exerted on the keys or the sensor from above.

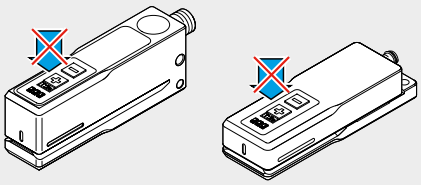

NOTE: In product variants with 4 pins, the parameterization is locked with the keys, if pin 2 is connected with GND. This may also be the case if pin 2 is connected with an IO-Link Master.

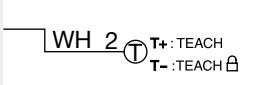

8.2.1 AUTOTEACH TO MOVING LABEL TAPE

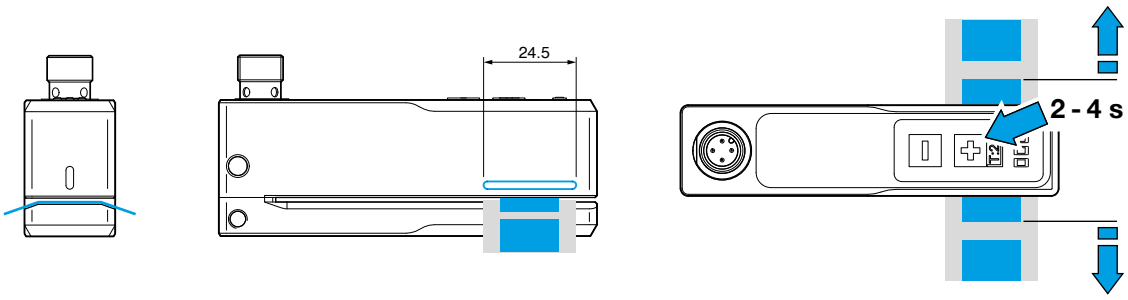

Insert the tensioned label tape into the fork opening while lightly touching the lower leg. Position the label tape in the detection area of the sensor and move without lifting movement during autoteach. Guide at least 3 labels and 3 label gaps through the fork opening. The autoteach process stops automatically.

Perform autoteach	LED display
▪ Key ⊞: Actuate 2-4 seconds and remove fingers from sensor	LED2 (yellow) on (sequence 1) LED2 (yellow) flashes quickly
▪ Autoteach process begins	
▪ Move the label tape with labels and gaps in the direction of the arrow	
▪ Autoteach process ends automatically after several seconds	LED2 (yellow) flashing stops

Display autoteach result	LED display
▪ Teaching process successful	LED2 (yellow) flashes (2x)
▪ Teaching process not successful	LED2 (yellow) flashes (4x) and LED3 (red) on

NOTE: In case of an unsuccessful teaching process, a new switching point is set.
It is recommended to reteach the sensor.

8.2.2 STATIC INDIVIDUAL VALUE TEACHING AND LABEL GAP

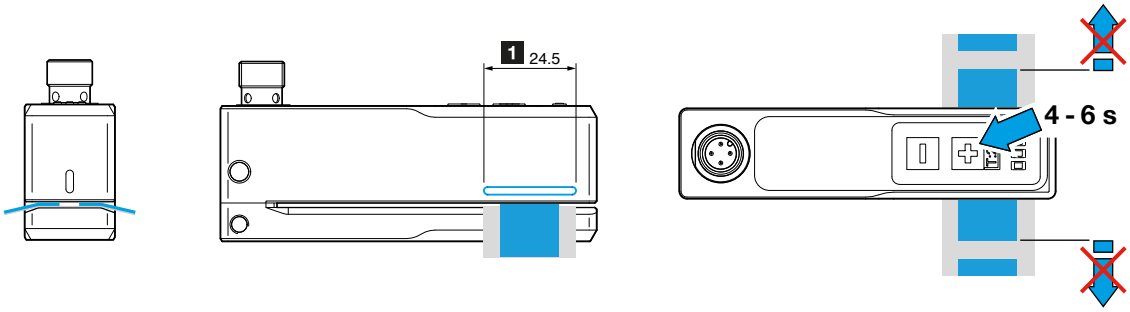

Position the label gap and label tape statically while lightly touching the lower leg in the detection area of the sensor and do not move it during the teaching process.

Perform teaching	LED display
▪ Position label gap statically in the detection area of the sensor ▪ Actuate button ⊞ 4-6 seconds and remove fingers from sensor	LED2 (yellow) off (sequence 2)

Display teach result	LED display
▪ Teaching process successful	LED2 (yellow) flashes (2x)
▪ Teaching process not successful	LED2 (yellow) flashes (4x) and LED3 (red) on

NOTE: In case of an unsuccessful teaching process, a new switching point is set. It is recommended to reteach the sensor.

8.2.3 MANUAL ADJUSTMENT OF THE SWITCHING POINT

Through a manual adjustment of the switching point, a higher functional reserve can be attained for difficult materials.

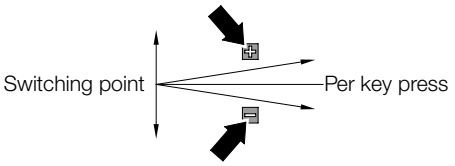

Briefly pressing the ⊞ and ⊟ buttons will adjust the switching point of switching output 1 in small increments.
Each press of the button will increase/decrease the switching point by 5.
Briefly pressing ⊟ makes the sensor more sensitive. Labels can be detected more easily.
Briefly pressing ⊞ makes the sensor less sensitive. Labels cannot be detected as easily.

NOTE:
Check the switching behavior of the sensor after the adjustment of the switching point is completed.

8.2.4 ADJUST SWITCHING LOGIC

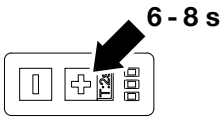

In the factory, the switching output is active when the label is in differential mode with the NO switching logic. After teaching the label tape, the switching output is active when the label in located in the detection area. Changing the switching logic to NC can be done via the keys.

Adjust switching logic	LED display
▪ Key ⊞: Actuate 6-8 seconds	LED2 (yellow) on (sequence 1)
▪ Sensor is changed from NO to NC or from NC to NO	LED2 (yellow) adjustment of the switching logic

8.2.5 RESET PARAMETERIZATION TO FACTORY SETTING

Disconnect the sensor from power.
Connect supply voltage to sensor and simultaneously press and hold the key ⊞ for >2 sec.

8.2.6 CALIBRATION OF SENSOR TO REFERENCE VALUE

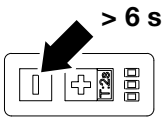

After cleaning and mounting of lower part have been completed according to chapter 11.1, perform the calibration of the sensor without label tape to the reference value.

Calibration of reference value	LED display
▪ Remove label tape from fork opening ▪ Actuate button ⊟ for at least 6 seconds	LED2 (yellow) on (sequence 1)

Display calibration	LED display
▪ Calibration process ended successfully	Flashes 2x LED3 (yellow)

NOTE:
After successful calibration of the sensor, the sensor is calibrated to the mechanical position of upper and lower parts. This may result in deviating process values. A reset of the calibration to factory settings is not possible.

8.3 PARAMETERIZATION WITH MULTI-FUNCTION INPUT ON PIN 2

Product variants with (plug and) 4 pins have a remote teaching function (*see 4.2 Variants, page 5*). Pin 2 is configured in the factory setting as an input (High Active).

NOTE: Alternately, pin 2 may have a different function depending on IO-Link configuration of the sensor. (*see 9.6.4 Parameters for multifunction input and output to pin 2, page 20*).

8.3.1 AUTOTEACH TO MOVING LABEL TAPE

Insert the tensioned label tape into the fork opening while lightly touching the lower leg. Position the label tape in the detection area of the sensor and move without lifting movement during the autoteach process. Guide at least 3 labels and 3 label gaps through the fork opening. The autoteach process stops automatically
after a maximum of 60 seconds.

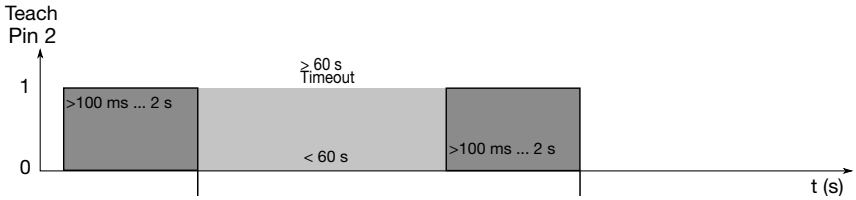

Perform autoteach	LED display
▪ Activate pin 2 for 0.1 to 2 seconds (24V). ▪ Move the label tape with labels and gaps through the fork opening ▪ Autoteach process ends automatically after several seconds	LED2 (yellow) off (sequence 1) LED2 (yellow) flashes quickly LED2 (yellow) flashing stops

Display autoteach result	LED display
▪ Teaching process successful ▪ Teaching process not successful	LED2 (yellow) flashes (2x) LED2 (yellow) flashes (4x) and LED3 (red) on

NOTE: In case of an unsuccessful teaching process, a new switching point is set. It is recommended to reteach the sensor.

8.3.2 STATIC INDIVIDUAL VALUE TEACHING AND LABEL GAP

Position the label gap and label tape statically while lightly touching the lower leg in the detection area of the sensor and do not move it during the teaching process.

Perform teaching	LED display
▪ Position label gap statically in the detection area of the sensor ▪ Activate pin 2 for 2 to 4 seconds (24V).	 LED2 (yellow) on (sequence 1)

Display teach result	LED display
▪ Teaching process successful	LED2 (yellow) flashes (2x)
▪ Teaching process not successful	LED2 (yellow) flashes (4x) and LED3 (red) on

NOTE: In case of an unsuccessful teaching process, a new switching point is set. It is recommended to reteach the sensor.

8.3.3. ADJUST SWITCHING LOGIC

In the factory, the switching output is active when the label is in differential mode with the NO switching logic. After teaching the label tape, the switching output is active when the label in located in the detection area. Changing the switching logic to NC can be done with pin 2.

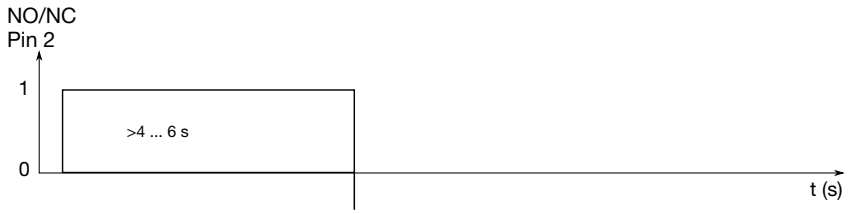

Adjust switching logic	LED display
▪ Activate pin 2 for 4 to 6 seconds (24V).	LED2 (yellow) on (sequence 2)
▪ Sensor is changed from NO to NC or from NC to NO	LED2 (yellow) adjustment of the switching logic

9.3.4. KEY LOCK

If pin 2 is connected continuously to GND, the keys are locked.

9 IO-LINK

9.1 INTERFACE

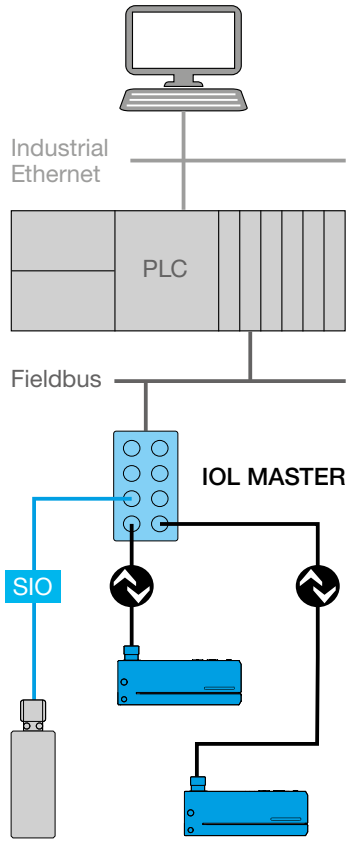

Possible system architecture

IO-Link is a communication system for connecting intelligent sensors and actuators to automation systems.
IO-Link is standardized in the IEC 61131-9 standard.

The devices have the following IO-Link specification:
IO-Link version V1.1.3 COM2 (38.4 kbaud),
profile smart sensor 2nd edition V 1.1 SSP 4.1.1

The device can also be parameterized with appropriate IO-Link parameterization software and an IO-Link Master.

Offline parameterization can be performed with the following di-soric products:
- with PC and IOL Master with software version V 5.1 and higher
- with PC with IOL portable

The IO-Link Master establishes the connection between IO-Link devices and the automation system. An IO-Link Master may possess several IO-Link ports.
One IO-Link device can be connected to each port (point-to-point communication).

9.2 IODD

In addition to an IO-Link Master with software, you also need the IODD (IO Device Description) for the device.
The IODD can be found via the QR code on the packaging or via the article number at www.di-soric.com under “Downloads”.
You can also find the IODD in the IODDfinder portal of the IO-Link Consortium: ioddfinder.io-link.com
The IODD consists of an XML file and images. The download file is a ZIP file. The IODD describes IO-Link devices. It contains information regarding identification, devices, device parameters, process and diagnostics data, communications properties, and the structure of user interfaces in the engineering tool.

NOTE: In the IODD download at www.di-soric.com, there are HTML files that graphically represent the contents of the XML main file. The following representations were taken from the English HTML file with the user role “Specialist”.

9.3 IDENTIFICATION

IO-Link enables the identification of IO-Link device with a connected IO-Link Master. The following identification data is located in the Identification menu:

Identification Menu
Idendification
V_VendorName
V_VendorText
V_ProductName
V_ProductID
V_ProductText
V_Lot
V_SerialNumber
V_HardwareRevision
V_FirmwareRevision
V_ApplicationSpecificTag
V_CP_FunctionTag
V_CP_LocationTag
V_SystemCommand, Button:=126
V_SystemCommand, Button:=127

NOTE: The Locator function offers the option to quickly find the device in the system with a command. With the values 126 for Locator and 127 for Locator stop, the device can be easily visually identified.

9.4 PROCESS DATA

The process data is transferred to the Master in a cyclical data telegram. The input data PDIn has a data length of 4 bytes.

ProcessDataIn "Process Data Input" id=PI_ProcessDataIn

bit length: 32
data type: 32-bit Record (subindex access not supported)

subindex	bit offset	data type	allowed values	default value	acc. restr.	mod. other var.	excl. from DS	name	description
1	16	16-bit Integer	-32760 = Out of Range (-), 32760 = Out of Range (+), 32764 = No Measurement Data, 0..4095		ro			Measured Value	Measured Value
2	8	8-bit Integer						Scale	Shows the multiplier for the measurement value of the sensor: 10exp(scale)
6	0	Boolean	false = Inactive, true = Active					Switch State (SSC1.1)	Switch state for SSC1.1
7	1	Boolean	false = Inactive, true = Active					Switch State (SSC1.2)	Switch state for SSC1.2

Octet 0

bit offset	31	30	29	28	27	26	25	24
subindex	1							
element bit	15	14	13	12	11	10	9	8

Octet 1

bit offset	23	22	21	20	19	18	17	16
subindex	1							
element bit	7	6	5	4	3	2	1	0

Octet 2

bit offset	15	14	13	12	11	10	9	8
subindex	2							
element bit	7	6	5	4	3	2	1	0

Octet 3

bit offset	7	6	5	4	3	2	1	0
subindex	//////	//////	//////	//////	//////	//////	7	6

The measured value (subindex 1) signals the damping through the label tape in the detection area of the sensor.
Typically, the following measured value situation results:
Small measured value: no label tape in the detection area
Elevated measured value: Label gap in the detection area
High measured value: Label in the detection area

NOTE:
Depending on the type of label tape, different measured values in the label gap and on the label will result.

The switching state of SSC1.1 (subindex 6) is used to detect labels. Factory setting: 0=No label, 1=Label present

9.5 BASIC FUNCTIONS

Basic functions are established through the IO-Link standard. The description of elementary commands is below.

Resetting the device to factory settings (application reset) with value 129
Resetting the device to factory settings and disconnecting IO-Link (back to box) with value 131
Variable locking of local elements via IO-Link with index 12 subindex 4
Value: 0=Not locked, 1=Locked

Standard Variable "Device Access Locks" index=12 id=V_DeviceAccessLocks

description: The access to the device parameters can be restricted by setting appropriate flags within this parameter.
data type: 16-bit Record (subindex access not supported)
access rights: rw

subindex	bit offset	data type	allowed values	default value	acc. restr.	mod. other var.	excl. from DS	name	description
1	0	Boolean	false = Unlocked, true = Locked					Parameter Write Access	This lock prevents the write access to all read/write parameters of the device except for the parameter 'Device Access Locks'.
2	1	Boolean	false = Unlocked, true = Locked					Data Storage	This lock prevents the write access to the device parameters via the data storage mechanism.
3	2	Boolean	false = Unlocked, true = Locked					Local Parameterization	This lock prevents the device settings from being changed via local operating elements on the device.
4	3	Boolean	false = Unlocked, true = Locked	0				Local User Interface	This lock prevents the access to the device settings and display via a local user interface. The user interface is disabled.

Octet 0

bit offset	15	14	13	12	11	10	9	8
subindex	//////	//////	//////	//////	//////	//////	//////	//////

Octet 1

bit offset	7	6	5	4	3	2	1	0
subindex	//////	//////	//////	//////	4	3	2	1

NOTE:
Further basic functions can be seen in the IODD of the device.

9.6 PARAMETERS AND COMMANDS

IO-Link parameters enable the configuration of IO-Link devices. The sensor has the following elementary parameters.

9.6.1 PARAMETERS FOR THE SENSOR FUNCTION

With the sensor mode (index 73), the device can be optimized for specific application cases.
Depending on the sensor mode, the maximum tape speed and the attainable reproducibility changes.
Value: 0=Standard, 1=Precision, 2=Speed

Variable "Sensor Mode" index=73 id=V_OperatingMode

description: Selected operating mode of the sensor: default, precision or speed
data type: 8-bit UInteger
allowed values: 0 = Standard, 1 = Precision, 2 = Speed
default value: 0
access rights: rw

octet	0	
bit offset	7 - 0	
element bit	7 - 0	

NOTE: Technical data can be found via the QR code on the packaging or alternately via the article number at www.di-soric.com.

9.6.2 ELEMENTARY PARAMETERS FOR THE SWITCHING OUTPUT

The switching point SP1 for the switching output is defined with index 60 subindex 1.
Value range 0 to 4000, the factory setting for SP1 is 100.

Variable "SSC1.1 Param" index=60 id=V_SSC11_Param

description: Defines the setpoint values for switching signal channel 1.1
data type: 64-bit Record
access rights: rw
dynamic

subindex	bit offset	data type	allowed values	default value	acc. restr.	mod. other var.	excl. from DS	name	description
1	32	32-bit UInteger	0..5000	100				SP1	Defines the setpoint 1 value for the switching signal channel
2	0	32-bit UInteger	0..5000	200				SP2	Defines the setpoint 2 value for the switching signal channel

octet	0	1	2	3	4	5	6	7
bit offset	63 - 56	55 - 48	47 - 40	39 - 32	31 - 24	23 - 16	15 - 8	7 - 0
subindex	1	1	1	1	2	2	2	2
element bit	31 - 24	23 - 16	15 - 8	7 - 0	31 - 24	23 - 16	15 - 8	7 - 0

The switching logic is defined with index 61 subindex 1.
Values: 0=High Active (NO), 1=Low Active (NC). The factory setting is 0=High Active (NO)
The switching behavior for the switching output is defined with index 61 subindex 2.
Permitted values: 0=Deactivated, 1=Single Point, 2=Window, 3=Two Point. The factory setting is 1=Single Point

NOTE:
The preset value 1 = Single Point is appropriate for detecting labels on a carrier tape.

The hysteresis for the switching output is defined with index 61 subindex 3.
The hysteresis can be determined as the measurement difference between the switch-on and switch-off points.
Value range: 10 to 100 or the factory setting is 15.

Variable "SSC1.1 Config" index=61 id=V_SSC11_Config

description: Defines the configuration parameter for switching signal channel 1.2
data type: 48-bit Record
access rights: rw
dynamic

subindex	bit offset	data type	allowed values	default value	acc. restr.	mod. other var.	excl. from DS	name	description
1	40	8-bit UInteger	0 = High Active, 1 = Low Active	0				Logic	Defines the logical representation of the switching signal in the process data
2	32	8-bit UInteger	0 = Deactivated, 1 = Single Point, 2 = Window, 3 = Two point	1				Mode	Sets the evaluation mode of the switching signal
3	0	32-bit UInteger	10..100	15				Hyst	Defines the hysteresis of the switchpoint. A higher hysteresis may help to increase stability in critical applications.

octet	0	1	2	3	4	5
bit offset	47 - 40	39 - 32	31 - 24	23 - 16	15 - 8	7 - 0
subindex	1	2	3	3	3	3
element bit	7 - 0	7 - 0	31 - 24	23 - 16	15 - 8	7 - 0

In the factory setting Single Point, the following switching behavior results. The function is based on the Smart Sensor profile.

In the Single Point mode, the switching information changes when the measured value exceeds the threshold defined in setpoint SP1 in the case of a rising or falling measured value (taking into account the hysteresis).

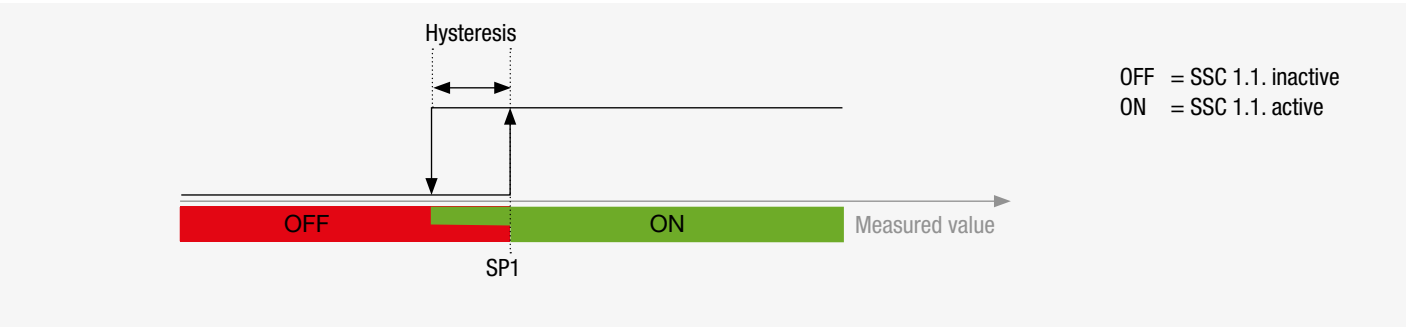

"Example of presence detection" single point mode

The polarity for the switching output is defined with index 70.
Values: 0=Differential mode output (PP), 1=NPN output, 2=PNP output, the factory setting is 0-PP (push-pull).

Variable "Switching Output (Pin 4)" index=70 id=V_OutputModeinSIOMode

description: Polarity of the switching output
data type: 8-bit UInteger
allowed values: 0 = SSC1.1 PP, 1 = SSC1.1 NPN, 2 = SSC1.1 PNP
default value: 0
access rights: rw

octet	0	
bit offset	7 - 0	
element bit	7 - 0	

The switch-on delay for the switching output is defined with index 66.
Value range: 0 to 60.000 ms

Variable "SSC1.2 Switch-On Delay" index=68 id=V_SSC12_DS

description: Defines the switch-on delay for the switching signal of signal channel 1.2
data type: 16-bit UInteger
allowed values: 0..60000
default value: 0
access rights: rw

octet	0	1	
bit offset	15 - 8	7 - 0	
element bit	15 - 8	7 - 0	

The switch-off delay for the switching output is defined with index 67.
Value range: 0 to 60.000 ms

Variable "SSC1.2 Switch-Off Delay" index=69 id=V_SSC12_DR

description: Defines the switch-off delay for the switching signal of signal channel 1.2
data type: 16-bit UInteger
allowed values: 0..60000
default value: 0
access rights: rw

octet	0	1	
bit offset	15 - 8	7 - 0	
element bit	15 - 8	7 - 0	

9.6.3 TEACHING COMMANDS FOR THE SWITCHING OUTPUT

The device supports several teaching commands for automatic detection of the switching point.

Dynamic Teach with moving label tape for the detection of labels with SSC1.1.
- System command 72 Teach SP1 Start
- Guide at least 3 labels and 3 label gaps through the fork opening
- System command Teach SP1 stop

NOTE: Observe the notes in chapter 8.2.1. Different from autoteach by key or pin 2. Dynamic Teach must be ended with a command.

Individual value teaching static on carrier tape for the detection of labels with SSC1.1.
- Position label gap statically in the detection area of the sensor
- System command 75 Teach Gap SP1

NOTE: Observe the notes in chapter 8.2.2. Teaching to the carrier tape is only effective with low measured value fluctuations of the carrier material.

- Individual value teaching static to label
- Position the labels statically in the detection range.
- System command 76 Teach Label SP1

NOTE:
Teaching to the label is only effective with low measured value fluctuations on the label.

The teaching values for detecting the switching point of the switching output SSC1.1 SP1 can be found under index 80 subindex 1 (SSSC1.1. SP1 TP1) and subindex 2 (SSC1.1. SP1 TP2).

Variable "SSC1.1 SP1" index=80 id=V_TeachValuesSSC1SP1

description: Values detected during teach procedure
data type: 64-bit Record
access rights: ro
dynamic

subindex	bit offset	data type	allowed values	default value	acc. restr.	mod. other var.	excl. from DS	name	description
1	32	32-bit UInteger		0	ro			TP1	Internal, lower teach value
2	0	32-bit UInteger		0	ro			TP2	Internal, upper teach value

octet	0	1	2	3	4	5	6	7
bit offset	63 - 56	55 - 48	47 - 40	39 - 32	31 - 24	23 - 16	15 - 8	7 - 0
subindex	1	1	1	1	2	2	2	2
element bit	31 - 24	23 - 16	15 - 8	7 - 0	31 - 24	23 - 16	15 - 8	7 - 0

Below are examples of teaching values of a label sensor with the Single Point switching behavior.

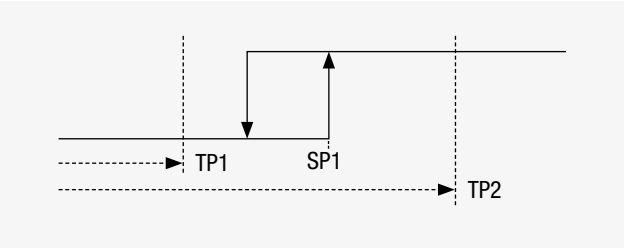

"Two Value Teach" (Single Point Mode)

NOTE:
The teaching values SSC1.1. SP1 TP1 and SSC1.1. SP1 TP2 are appropriate for assessing the teaching result.

9.6.4 PARAMETERS FOR MULTIFUNCTION INPUT AND OUTPUT TO PIN 2

In addition to the function described in chapter 8.3 as an input, pin 2 with index 71 can alternately be configured as a switching output or be completely deactivated. The following functions can be parameterized in this way:

- Value 0: Pin 2 is deactivated (no locking of operating element with IO-Link Master and pin 2 on GND)
- Value 4, 5, 6: Parallel operation of pin 2 as fast switching output (SSC1.1) and IO-Link communication on pin 4, polarity alternatively PP, NPN or PNP.
- Value 10: Pin 2 is a warning output and signals an unsuccessful teaching process
- Value 16: Factory setting, pin 2 is configured as an input. GND locks keys
- Value 33, 34, 35: Second additional switching output (SSC1.2) with pin 2 for process monitoring
  Polarity alternatively differential mode, NPN or PNP

Variable "Multi I/O (Pin 2)" index=71 id=V_MultiIO2

description: Operation mode for Multi I/O (Pin 2)
data type: 8-bit UInteger
allowed values: 0 = Deactivated, 4 = SSC1.1 PP, 5 = SSC1.1 NPN, 6 = SSC1.1 PNP, 10 = Warning Output, 16 = Teach and User-Interface lock
default value: 16
access rights: rw

octet	0	
bit offset	7 - 0	
element bit	7 - 0	

If pin 2 is parameterized as a fast switching output, then the sensor simultaneously transfers switching signals and IO-Link data in parallel operation.

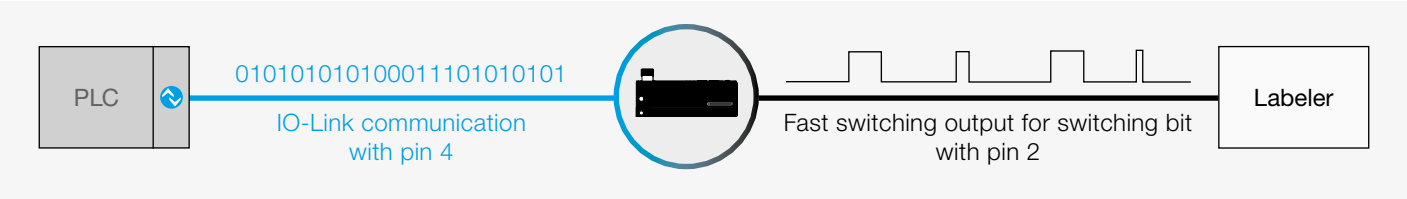

If pin 2 is parameterized as an input, the logic of the input can be switched with index 76 between High Active to Low Active.

Variable "Pin 2 Input Polarity" index=76 id=V_Pin2Polarity

description: Polarity of the external signal on Pin 2
data type: 8-bit UInteger
allowed values: 0 = High Active, 1 = Low Active
default value: 0
access rights: rw

octet	0	
bit offset	7 - 0	
element bit	7 - 0	

9.6.5 CALIBRATION OF SENSOR TO REFERENCE VALUE

After cleaning and mounting of lower part have been completed according to chapter 11.1, perform the calibration of the sensor without label tape to the reference value.

Command ID 2 index 169 Set Reference Value

NOTE:
After successful calibration of the sensor, the sensor is calibrated to the mechanical position of upper and lower parts. This may result in deviating process values. A reset of the calibration to factory settings is not possible.

9.6.6 PARAMETERS OF ERROR TYPES

Code	Additional code	Name	Description
128 (0x80)	0 (0x00)	Device application error - no details	Service was denied by the technology-specific application. No detailed root-cause information is available.
128 (0x80)	17 (0x11)	Index not available	Read or write access attempt to a non-existing index.
128 (0x80)	18 (0x12)	Subindex not available	Read or write access attempt to a non-existing subindex of an existing index.
128 (0x80)	32 (0x20)	Service temporarily not available	Parameter not accessible due to the current state of the technology-specific application.
128 (0x80)	35 (0x23)	Access denied	Write access to a read-only parameter or read access to write-only parameter.
128 (0x80)	48 (0x30)	Parameter value out of range	Written parameter value is outside of the permitted value range.
128 (0x80)	49 (0x31)	Parameter value above limit	Written parameter value is above its specified value range.
128 (0x80)	50 (0x32)	Parameter value below limit	Written parameter value is below its specified value range.
128 (0x80)	51 (0x33)	Parameter length overrun	Written parameter is longer than specified.
128 (0x80)	52 (0x34)	Parameter length underrun	Written parameter is shorter than specified.
128 (0x80)	53 (0x35)	Function unavailable	Written command is not supported by the technology-specific application.
128 (0x80)	54 (0x36)	Function temporarily unavailable	Written command is unavailable due to the current state of the technology-specific application.
128 (0x80)	64 (0x40)	Invalid parameter set	Written single parameter value collides with other existing parameter settings.
128 (0x80)	65 (0x41)	Inconsistent parameter set	Parameter set inconsistencies at the end of block parameter transfer. Device plausibility check failed.
128 (0x80)	130 (0x82)	Application not ready	Read or write access denied. The technology-specific application is temporarily unavailable.

9.7 DIAGNOSTICS

IO-Link diagnosis enables the efficient maintenance of the device.
The Diagnosis menu can be found below:

Diagnosis Menu
Diagnosis
V_DeviceStatus
Detailed Device Status
V_DetailedDeviceStatus
Not resettable diagnosis data
V_Temperature * 0.1 °C, Dec.1
V_Temperature_Max * 0.1 °C, Dec.1
V_OperatingTime h
V_StartUps
Resettable diagnosis data
V_SSC11_SwitchCounter
V_SSC12_SwitchCounter
V_ProcessDataLimits.Min
V_ProcessDataLimits.Max
V_SystemCommand, Button:=163
Measurement Data Information
V_SSP_MDC_Descriptor

9.7.1 STANDARD

The value status with index 36 displays the current device status.
Value: 0=Device is OK, 1=Maintenance required, 2=Outside specification, 3=Function test, 4=Error
Additional information can be found under the detailed device status on index 37.

9.7.2 DEVICE-SPECIFIC DIAGNOSIS

Non-resettable diagnosis:
- Index 86: current internal temperature in device in °C
- Index 93: Number of operating hours
- Index 94: Number of switch-on processes
- Index 96: maximum temperature since commissioning in °C

Resettable diagnostic values are reset after switching on or with a command
The command under index 2 with a value 163 resets the following diagnostic values:
- Index85: Number of switching processes of SSC1.1 (label detected)
- Index86: Number of switching processes of SSC1.2 for the second additional switching output
- Index 84, subindex 1: Minimum measured value after switching on or reset
- Index 84, subindex 2: Maximum measured value after switching on or reset

NOTE: The minimum and maximum measured value enable an assessment of the object-dependent variation of measured values and are appropriate for assessment of the application.

10 TROUBLESHOOTING

LED / fault pattern	Possible cause	Measures
LED1 green off	No voltage or voltage outside operating voltage	Check voltage supply
Sensor does not react to operation on keyboard	Keys locked	Check pin 2 circuit Disconnect pin 2 from GND or unlock sensor with IO-Link (observe Device Access Locks)
Sensor does not react with pin 2 circuit	Pin 2 is not configured as input	Configure pin 2 via IO-Link as input or set device to factory setting via IO-Link
LED2 (yellow) flashes (4x) and LED3 (red) on after teaching	Teaching not successful	Repeat teaching
Switching output in label gap active	NO/NC configuration not appropriate for application	NO/NC changeover (keys, IO-Link or pin 2)
Switching output does not switch or not process-reliable on label and label gap	High variance in the tape guidance or difficult material	Optimize tape guidance and repeat teaching or adjust teaching process or manual setting with ⊞/⊟ keys via manual configuration of the switching point with the assistance of the IO-Link diagnosis

In case of faulty device behavior:
- Disconnect power from device and re-establish factory settings
- Perform IO-Link diagnosis

If the problems persist, contact di-soric Service.

Have the following information ready when contacting Service:
- Customer number
- Article designation or article number
- Serial or batch number
- Description of support inquiry

11 MAINTENANCE, REPAIRS, DISPOSAL

11.1 MAINTENANCE

The device works in ongoing operation without maintenance.
Due to the small gap between the upper and lower parts, adhesive residue of label tapes can adhere in the area of the fork opening. After unscrewing the screws from the upper and lower parts, the adhesive residue can be removed with a soft cloth. Then screw the upper and lower parts back together.

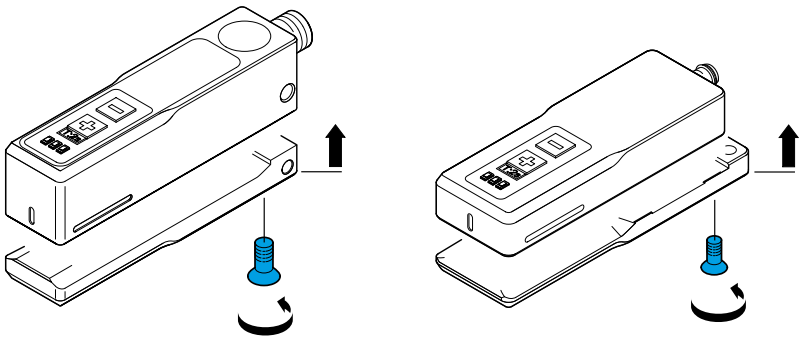

IMPORTANT! Tighten screws evenly in order to avoid mechanical stresses. Observe the maximum torque for the fastening screws. (M3 max. 0.5 Nm, M4 max. 1.4 Nm, M5: max. 2.5 Nm).

IMPORTANT!!
After successful cleaning and mounting of the lower part, the calibration of the sensor without label tape is performed via the IO-Link command “Set Reference Value” or with the keys.

IMPORTANT!
After the cleaning, mounting and calibration have been completed, teach the label sensor to the label tape.

11.2 REPAIR

Defective devices may only be repaired by the manufacturer.

11.3 DISPOSAL

The device is to be disposed of in an environmentally appropriate manner according to the respectively applicable waste removal regulations.

SOLUTIONS. CLEVER. PRACTICAL.

© di-soric | All information is subject to change. Contents may contain mistakes or print errors and are subject to technical changes. | 600018-0000EN · Rev 1 · 202312

di-soric GmbH & Co. KG | Steinbeisstrasse 6 | 73660 Urbach | Germany
Phone +49 71 81 98 79-0 | Fax +49 71 81 98 79-179 | info@di-soric.com

www.di-soric.com